CITY OF ST. MARYS, GEORGIA

April 7, 2014

CITY COUNCIL MEETING
6:00 p.m.

AMENDED AGENDA (04/02/2014)

I. CALL TO ORDER

II. INVOCATION: *Councilmember Linda P. Williams*

III. PLEDGE OF ALLEGIANCE

IV. ROLL CALL **QUORUM: YES____ NO____**

V. APPROVAL OF MINUTES: *March 17, 2014 Regular City Council Meeting Minutes*
March 31, 2014 Special Called City Council Meeting Minutes
March 31, 2014 Executive Session Meeting Minutes1
March 31, 2014 Executive Session Meeting Minutes 2
April 3, 2014 Special Called City Council Meeting Minutes
April 3, 2014 Executive Session Meeting Minutes

VI. PRESENTATIONS:

JOINT PROCLAMATION CHILD ABUSE PREVENTION MONTH: *Daphne Sullivan*

CODE COMPLIANCE OFFICER: *Dennis Blais*

ACKNOWLEDGEMENT DONINI'S BUSINESS: *Mayor Morrissey*

GEORGIA CITIES WEEK WINNERS: *Mayor Morrissey*

THOMASVILLE, GA TRIP REPORT: *Kay Westberry* ***(Added)***

ORANGE HALL ANNUAL REPORT: *Bridget Wenum, Chairman*

BOARD APPOINTMENT (VACANCY):
Library Board (James Caskey)

VII. SET CONSENT AGENDA

VIII. APPROVAL OF THE AGENDA

IX. GRANTING AUDIENCE TO THE PUBLIC

X. OLD BUSINESS: NO ITEMS

XI. NEW BUSINESS:

A. MI CASA RESTAURANT-CINCO DE MAYO FESTIVAL: .....**TAB "A"**
Council consideration to approve the sale of alcohol in the closed off portion of the parking lot outside the restaurant for the Cinco De Mayo Festival

B. ORDINANCES-CITY FIRE CODES: *Robby Horton (Interim City Manager)*
Request amendments to City Fire Ordinances to match the State Fire Marshal's Minimum Standards for Fire and Life Safety Codes .....**TAB "B"**

C. ORDINANCES-CITY BUILDING CODES AND APPENDIX FLOOD ELEVATION AND WIND SPEED: *Robby Horton (Interim City Manager)* .....**TAB "C"**
Request amendments to City Building Codes to match Georgia State mandated Minimum Standards and approval of appendix recommended by the Georgia Department of Community Affairs (DCA)

D. WAYFINDING SIGNAGE (ENCROACHMENT PERMIT APPLICATION): .....**TAB "D"**
Robby Horton (Interim City Manager)
Request authorization for Interim City Manager to sign the Encroachment Permit application for Georgia Department of Transportation

E. AIRPORT BID AWARD (CRACK SEAL AND REMARK) AND RESOLUTION: ....**TAB "E"**
Jennifer Brown (Finance Director)
Council consideration of the Airport Bid Award for Crack Seal, Remark and authorization for approval of a resolution from Georgia Department of Transportation

F. BUDGET ORDINANCE-WELCOME CENTER: *Jennifer Brown (Finance Director)*
To amend FY 2014 Budget to provide funds for the Welcome Center Building improvements .....**TAB "F"**

G. BUDGET ORDINANCE-AIRPORT RUNWAY 13-31: *Jennifer Brown (Finance Director)*
To amend FY 2014 Budget to reflect funds received from Georgia Department of Transportation Airport Aid Programs and expenditures for runway 13-31....**TAB "G"**

H. BUDGET ORDINANCE-CODE ENFORCEMENT POSITION: .....**TAB "H"**
Jennifer Brown (Finance Director)

XII. REPORT OF AUTHORITIES, BOARDS, COMMISSIONS & COMMITTEES:

A. FINANCE DIRECTOR'S REPORT: *Jennifer Brown (Finance Director)*

B. MONTHLY SEA GRANT UPDATE: *Roger Weaver (Planning Director)*

C. CITY CALENDAR: *City Clerk*

XIII. REPORT OF MAYOR

XIV. GRANTING AUDIENCE TO THE PUBLIC

MAYOR AND COUNCIL COMMENTS

CITY MANAGER'S COMMENTS

XV. EXECUTIVE SESSION

XVI. ADJOURNMENT

This is a tentative agenda and is subject to change. Please check with City Hall prior to the Meeting for any revisions.

CITY COUNCIL MEETING
March 17, 2014
6:00 p.m.

MINUTES

The Mayor and City Council for the City of St. Marys, Georgia met for its regular City Council session on Monday, March 17, 2014 in the Council Chamber at City Hall.

PRESENT WERE:

Mayor John F. Morrissey
Councilmember Sam Colville
Councilmember Jim Gant
Councilmember Robert L. Nutter
Councilmember Dave Reilly
Councilmember Nancy Stasinis
Councilmember Linda P. Williams

CITY OFFICIALS PRESENT:

Robert Horton, Interim City Manager
Jennifer Brown, Finance Director
Donna Folsom, Human Resources Director
Bobby Marr, Public Works Director
Roger Weaver, Planning Director
Timothy Hatch, Chief of Police

DRAFT

CALL TO ORDER:

Mayor Morrissey called the City Council Meeting to order at 6:00 p.m. Councilmember Jim Gant gave the invocation. Mayor Morrissey led the audience in the pledge of allegiance. Council roll call indicated a quorum of Council members present for the meeting.

APPROVAL OF MINUTES: *March 3, 2014 Regular City Council Meeting Minutes*

Councilmember Nutter moved to approve the March 3, 2014 Regular City Council meeting minutes. Councilmember Reilly seconded the motion. Voting was unanimous in favor of the motion.

March 3, 2014 Executive Session City Council Meeting Minutes

Councilmember Nutter moved to approve the March 3, 2014 Executive Session City Council meeting minutes. Councilmember Colville seconded the motion. Voting was unanimous in favor of the motion.

PRESENTATIONS:

GEORGIA POWER: *Joel Hanner (Added)*

Joel Hanner presented Mayor Morrissey with a franchise check for $657,469.37 and stated Georgia Power is proud to be a community citizen and serve the residents of St. Marys.

2014 EARTH HOUR JOINT PROCLAMATION: *Mayor Morrissey*

Mayor Morrissey read an excerpt from the 2014 Earth Hour Joint Proclamation (St. Marys, Kingsland, Woodbine and Camden County) declaring Earth Hour 2014 for March 29, 2014 beginning at 8:30 p.m. for one hour. Councilmember Nutter encouraged residents in Camden

County to enjoy a candlelight dinner in downtown St. Marys. Councilmember Stasinis mentioned that approximately 73% of residents in St. Marys participate in recycling and thanked them for their efforts to support the environment.

2014 NATIONAL CRIME VICTIM'S RIGHTS WEEK PROCLAMATION: *Mayor Morrissey (Added)*
Mayor Morrissey read an excerpt from the 2014 National Crime Victims' Rights Week Proclamation scheduled for April 6 – 12, 2014. Mayor Morrissey stated improvements can be made with community participation.

2014 GEORGIA CITIES WEEK PROCLAMATION: *Mayor Morrissey*
Mayor Morrissey read the 2014 Georgia Cities Week Proclamation scheduled for April 13-19, 2014. Mayor Morrissey encouraged citizens to participate in the planned activities.

CITIZEN FEEDBACK: *Councilmember Dave Reilly (Added)*
Councilmember Reilly read an excerpt from a thank you note regarding the excellent job the St. Marys Fire Department did in assisting residents of St. Marys in an emergency situation.

BOARD ANNOUNCEMENTS (VACANCY):
Library Board (*James Caskey*)
Mayor Morrissey announced an upcoming vacancy on the Library Board.

BOARD APPOINTMENTS (VACANCY):
1. *Camden County Board of Education-Sex Education Instructional Material Review Committee (Reeney Adams)*

Councilmember Stasinis made a motion to appoint Karen Preble to the Camden County Board of Education-Sex Education Instructional Material Review Committee. Councilmember Reilly seconded the motion. Voting was unanimous in favor of the motion.

2. *Downtown Development Authority (Jerry Brandon)*

CANDIDATES	FOR
Joseph Anteo	
Michael J. Dembeck	Councilmember Nutter
Sean D. Myers	
Michael H. Swain, Jr.	
William R. (Bill) Bruce	Councilmembers: Colville, Gant, Reilly & Williams

Councilmember Stasinis abstained from the vote.

Councilmember Reilly made a motion to appoint William R. Bruce to the Downtown Development Authority. Councilmember Colville seconded the motion. Voting was unanimous in favor of the motion. Councilmember Gant thanked each candidate for volunteering to serve the community and mentioned their excellent credentials. Councilmember Colville asked the candidates to continue serving the community and stated the City needs their valuable expertise. City Council thanked the well qualified candidates.

HISTORIC PRESERVATION COMMISSION ANNUAL REPORT: *Kay Westberry, Chairman*
Ms. Westberry gave Council pictures of proposed signs that could be utilized in Historic areas and gave a brief update on much needed Sign Ordinance revisions. Ms. Westberry briefly mentioned the 26 applications the Historic Preservation Commission reviewed over the last year. Ms. Westberry thanked Council for their support over the years. City Council thanked the

members of the Historic Preservation Commission for dedication and hard work. A copy of the report is attached as part of the official minutes.

SET CONSENT AGENDA (*):
Councilmember Nutter made a motion to approve the consent agenda as New Business B, C, D, F, K and N. Councilmember Reilly seconded the motion. Voting was unanimous in favor of the motion.

APPROVAL OF THE AGENDA:
Councilmember Gant made a motion to approve the agenda as revised. Councilmember Nutter seconded the motion. Voting was unanimous in favor of the motion.

GRANTING AUDIENCE TO THE PUBLIC:

Larry White, 102 Sylvia's Court: Mr. White referenced comments made by the St. Marys Senior Center Director at the Hospital Authority meeting regarding vandalism at the Senior Center.

OLD BUSINESS:

A. **WASHINGTON OAK & PUMP MEMORIAL:** *Roger Weaver*
Request approval for streamlined concept for Washington Oak and Pump
Councilmember Gant made a motion to approve moving forward with soliciting bids for design cost regarding Washington Oak and Pump. Councilmember Williams seconded the motion. Councilmember Gant moved for discussion and stated striping and signing should be added and if possible extended sidewalks on Orange Hall side of the street. Councilmember Nutter mentioned the project was not referenced during SPLOST discussions. Councilmember Nutter mentioned the potential loss of required parking for church members with the island.

Councilmember Nutter stated the concept was good but that City funds would be better utilized by ensuring other areas like Marsh View Lane have City water and sewer. Mr. Nutter stated that providing City utilities to much needed areas would improve quality of life, environment and bring in additional revenue. Councilmember Nutter suggested reviewing the idea once water and sewer had been implemented in other areas in the City. Councilmember Gant mentioned the request was for cost estimates and that the City would be better able to review the project with the estimated costs. Voting was recorded as follows:

FOR	OPPOSED
Councilmember Colville	Councilmember Nutter
Councilmember Gant	
Councilmember Reilly	
Councilmember Stasinis	
Councilmember Williams	

NEW BUSINESS:

A. **HISTORIC PRESERVATION COMMISSION SIGN ORDINANCE:** *Roger Weaver*
Councilmember Nutter made a motion to approve the revision to Ordinance 46, section 141 and the creation of a new section 114 in section 62. Councilmember Gant seconded the motion. Councilmember Reilly moved for discussion and stated he would like additional

advertisement so citizens in the Historic District would have an opportunity to review and provide feedback on ordinances that will impact them. Councilmember Nutter withdrew his motion.

Councilmember Nutter made a motion for the Planning Director to advertise and conduct another public session and bring the item before Council at the April 7th or April 21st Council meeting. Councilmember Reilly amended the motion to have the Planning Director advertise and conduct another public session and bring the item before Council at the first available opportunity. Councilmember Gant seconded the motion. Voting was unanimous in favor of the motion.

B. SHORT-TERM WORK PROGRAM RESOLUTION (*): *Roger Weaver*
Request approval for revised resolution for Short Term Work Program
Councilmember Nutter made a motion to approve the revised Short Term Work Program Resolution. Councilmember Reilly seconded the motion. Voting was unanimous in favor of the motion.

C. TRANSPORTATION ENHANCEMENT GRANT CHANGE ORDER (*): *Roger Weaver*
Councilmember Nutter made a motion to approve the Transportation Enhancement Grant Change Order for additional surveying of the Gateway parcel in the amount of $460.00 to Thomas and Hutton Engineering Company. Councilmember Reilly seconded the motion. Voting was unanimous in favor of the motion.

D. SEASONAL MOWING PERSONNEL (PUBLIC WORKS) (*): *Bobby Marr*
Councilmember Nutter made a motion to approve the hiring of two seasonal personnel in Public Works to perform right of way maintenance on Highway 40 and Spur 40. Councilmember Reilly seconded the motion. Voting was unanimous in favor of the motion.

E. SPECIAL ELECTION CALL REDEVELOPMENT POWERS:
Councilmember Reilly made a motion to approve the Special Election Call for Redevelopment Powers on the May 20, 2014 ballot. Councilmember Nutter seconded the motion. Councilmember Nutter moved for discussion and stated that no projects were presented to Council. Councilmember Colville stated other areas in the state have utilized this tool. Councilmember Reilly mentioned the various websites available to educate citizens. Voting was unanimous in favor of the motion. Mayor Morrissey read the Special Election Call regarding Redevelopment Powers.

F. 2ND QUARTER TOWN HALL MEETING (*): *To schedule 2nd Quarter Town Hall meeting for Thursday, April 3, 2014 at 6:00 p.m.*
Councilmember Nutter made a motion to approve the 2nd Quarter Town Hall meeting for Thursday, April 3, 2014 6:00 p.m. in Council Chambers at City Hall. Councilmember Reilly seconded the motion. Voting was unanimous in favor of the motion.

G. TOURISM FUNDS REQUEST FOR WELCOME CENTER: *Angela Wigger*
Councilmember Stasinis made a motion to approve up to $5,000.00 for improvements to the Ward Hernandez Building. Councilmember Reilly seconded the motion. Voting was unanimous in favor of the motion. Councilmember Gant asked for clarification on the space needed next door to the Hernandez Building. Angela Wigger (Tourism Director) mentioned the space (approximately 50X50) next to the building is owned by the Methodist Church and

Tourism would like to utilize it and create an outdoor area. Mrs. Wigger mentioned that just a written note from the church would be sufficient. Councilmember Colville thanked Tourism and Angela for acquiring the radio museum.

H. ST. MARYS HISTORY & MARITIME HERITAGE WALK INTRODUCTION & FUND REQUEST: *Angela Wigger*

The Tourism Director and Cheri Richter gave a brief overview of the project and positive impact to the community. Councilmember Gant made a motion to approve the local match of $15,000.00. Councilmember Williams seconded the motion. Voting was unanimous in favor of the motion.

I. ST. MARYS INTRACOASTAL GATEWAY PROPERTY SECURITY MEASURES: *Robby Horton (Interim City Manager) Moved to City Manager Comments*

J. BUILDING CODES: *Robby Horton (Interim City Manager) (Removed)*

K. ST. MARYS MUNICIPAL COURT REVISED COURT DATE (*): *Judge Loeffler*
Consideration and approval to change the court date from June 27, 2014 to June 20, 2014
Councilmember Nutter made a motion to approve revising the St. Marys Municipal Court date from June 27, 2014 to June 20, 2014. Councilmember Reilly seconded the motion. Voting was unanimous in favor of the motion.

L. AQUATIC CENTER REPAIRS & PURCHASES: *Jennifer Brown*
Councilmember Colville made a motion to approve $20,147.54 to cover repairs and purchases at the St. Marys Aquatic Center. Councilmember Reilly seconded the motion. Councilmember Reilly moved for discussion and mentioned the current and FY 2015 Budget to possibly include various maintenance items. Voting was unanimous in favor of the motion.

M. BUDGET CALENDAR FY 2015: *Moved to City Manager Comments*

N. BUDGET ORDINANCE-LOCAL MAINTENANCE IMPROVEMENT GRANT (LMIG): *Jennifer Brown*
Councilmember Nutter made a motion to approve amending the FY 2014 Budget to increase the Capital Projects Fund to reflect receipt of Local Maintenance Improvement Grant (LMIG) funds awarded by the Georgia Department of Transportation for improvement of streets and roadways. Councilmember Reilly seconded the motion. Voting was unanimous in favor of the motion.

REPORT OF AUTHORITIES, BOARDS, COMMISSIONS & COMMITTEES:

A. CITY CALENDAR: City Clerk
The City Clerk announced the upcoming events, activities and meetings up to April 7, 2014.

REPORT OF MAYOR

Mayor Morrissey announced the following meetings and activities for the public: Sea Grant Town Hall meeting on March 19, 2014 (Theater By The Trax), St. Marys River Clean Up on March 22, 2014 (Howard Gilman Memorial Park), Recycling Fair on March 29, 2014 (St. Marys

Aquatic Center), and the visit by the Chief of Naval Operations to Kings Bay Naval Base. Mayor Morrissey mentioned the national exposure St. Marys is receiving from Atlantic Magazine now Atlantic.com for the 2014 Mardi Gras Festival and the positive interviews given by various residents. Mayor Morrissey mentioned legislation being considered by the President regarding Flood Insurance and FEMA. Mayor Morrissey briefly spoke about the upcoming bid for ferry service to Cumberland Island and Florida's desire to service Cumberland Island as well.

GRANTING AUDIENCE TO THE PUBLIC:

Dave Schmitz, 112 New Hammock Circle: Mr. Schmitz asked Council to be active participants regarding Florida's desire to access Cumberland Island and syphon water from the river.

Christopher Thurner, 202 West Bryant: Mr. Thurner commented on the history between Cumberland Island, Amelia Island and Florida.

MAYOR AND COUNCIL COMMENTS:

Councilmember Williams briefly spoke about Redevelopment Powers. Councilmember Nutter mentioned that Up the Creek Expedition is offering free kayak use to those assisting with St. Marys River Clean-up by water on Friday, March 21, 2014 from 12:00 p.m. to 2:00 p.m. Councilmember Nutter also gave a brief overview of Flood Insurance rates and legislation.

CITY MANAGER'S COMMENTS:

*ST. MARYS INTRACOASTAL GATEWAY PROPERTY SECURITY MEASURES: Robert Horton briefly spoke about inappropriate activity (littering and parking) on the SMIG property March 8th & 9th, 2014. Mr. Horton mentioned increased Police patrols and security measure are being reviewed.

*BUDGET CALENDAR FY 2015: Robert Horton briefly reviewed the FY 2015 Budget Calendar with Council.

Mr. Horton gave an update on the St. Marys Senior Center vandalism incident. Mr. Horton mentioned security measures review, increased Police patrols, damage assessment and repairs by Public Works. Mr. Horton addressed issues with the Trolley Building and the coordinated effort with the Kiwanis.

Mayor Morrissey gave a brief overview of the selection process for the City Manager position.

EXECUTIVE SESSION:

There was no "Executive Session" at this time.

ADJOURNMENT:

Councilmember Colville made a motion for adjournment. Councilmember Nutter seconded the motion. Mayor Morrissey declared the meeting adjourned at 7:43 p.m.

Respectfully submitted,

_____

Deborah Walker-Reed, City Clerk

DRAFT

CITY OF ST. MARYS, GEORGIA
SPECIAL CALLED CITY COUNCIL MEETING
March 31, 2014
9:30 a.m.

MINUTES

The Mayor and City Council for the City of St. Marys, Georgia met for a Special Called City Council meeting on Monday, March 31, 2014 in the Council Chamber at City Hall.

PRESENT WERE:
Mayor John F. Morrissey
Councilmember Sam L. Colville
Councilmember Jim Gant
Councilmember Robert L. Nutter
Councilmember Dave Reilly
Councilmember Nancy Stasinis
Councilmember Linda P. Williams

CITY OFFICIALS PRESENT:
Robert Horton, Interim City Manager
Donna Folsom, Human Resources Director

DRAFT

CALL TO ORDER

Mayor Morrissey called the Special Called City Council meeting to order at 9:33 a.m. Councilmember Reilly gave the invocation and led the audience in the pledge of allegiance. Council roll call indicated a quorum of council members present for the meeting. Councilmembers Jim Gant and Sam L. Colville arrived after roll call.

BUSINESS:

A. **EXECUTIVE SESSION:** *Personnel (Discussion, deliberation, and interview applicants for City Manager position)*

Councilmember Nutter made a motion to adjourn to executive session to discuss personnel. Councilmember Williams seconded the motion. Voting was recorded as follows: Councilmembers Colville and Gant arrived after the initial vote but joined Council in Executive Session.

FOR	ABSENT
Councilmember Nutter	Councilmember Colville
Councilmember Reilly	Councilmember Gant
Councilmember Stasinis	
Councilmember Williams	

The Mayor and Council adjourned to executive session at 9:33 a.m., returning at 11:57 a.m. with Mayor Morrissey calling the Council meeting back to order.

Councilmember Colville made a motion to recess for lunch until 1:25 p.m. Councilmember Nutter seconded the motion. Voting was unanimous in favor of the motion. The Mayor and Council recessed for lunch at 11:58 a.m., returning at 1:25 p.m. with Mayor Morrissey called the Council meeting back to order.

Councilmember Reilly made a motion to adjourn to executive session to discuss personnel. Councilmember Colville seconded the motion. Voting was unanimous in favor of the motion.

The Mayor and Council adjourned to executive session at 1:29 p.m., returning at 4:15 p.m. with Mayor Morrissey calling the Council meeting back to order.

Councilmember Nutter made a motion for a Special Called City Council meeting for Thursday, April 3, 2014 at 1:00 p.m. for Executive Session to discuss personnel and to cancel the 4:00 p.m. Special Called City Council meeting for April 3, 2014. Councilmember Reilly seconded the motion. Voting was unanimous in favor of the motion.

ADJOURNMENT:

Councilmember Nutter made a motion for adjournment. Councilmember Stasinis seconded the motion. Mayor Morrissey declared the meeting adjourned at 4:17 p.m.

Respectfully submitted,

DRAFT

_____

Deborah Walker-Reed, City Clerk

CITY OF ST. MARYS, GEORGIA
SPECIAL CALLED CITY COUNCIL MEETING
April 3, 2014
1:00 p.m.

MINUTES

The Mayor and City Council for the City of St. Marys, Georgia met for a Special Called City Council meeting on Monday, April 3, 2014 in the Council Chamber at City Hall.

PRESENT WERE:
Mayor John F. Morrissey
Councilmember Sam L. Colville
Councilmember Jim Gant
Councilmember Robert L. Nutter
Councilmember Dave Reilly
Councilmember Nancy Stasinis
Councilmember Linda P. Williams

CITY OFFICIALS PRESENT:
Robert Horton, Interim City Manager
Donna Folsom, Human Resources Director

CALL TO ORDER

Mayor Morrissey called the Special Called City Council meeting to order at 1:00 p.m. Councilmember Colville gave the invocation and led the audience in the pledge of allegiance. Council roll call indicated a quorum of council members present for the meeting.

BUSINESS:

A. **EXECUTIVE SESSION:** *Personnel (Discussion, deliberation, and interview applicants for City Manager position)*

Councilmember Williams made a motion to adjourn to executive session to discuss personnel. Councilmember Stasinis seconded the motion. Voting was unanimous in favor of the motion.

The Mayor and Council adjourned to executive session at 1:02 p.m., returning at 2:42 p.m. with Mayor Morrissey calling the Council meeting back to order.

ADJOURNMENT:

Councilmember Reilly made a motion for adjournment. Councilmember Williams seconded the motion. Mayor Morrissey declared the meeting adjourned at 2:44 p.m.

Respectfully submitted,

_____
Deborah Walker-Reed, City Clerk

CASA
Court Appointed Special Advocates
FOR CHILDREN

Joint Proclamation

of the

City of St. Marys, City of Kingsland, City of Woodbine, Camden County Board of County Commissioners, Camden County Schools, Community Leaders, Naval Submarine Base Kings Bay, & Camden County CASA

Declaring April 2014 Child Abuse Prevention Month

WHEREAS, child abuse and neglect is a complex and ongoing problem in our society, affecting many children in Camden County; and

WHEREAS, every child is entitled to be loved, cared for, nurtured, to feel secure, and to be free from verbal, sexual, emotional and physical abuse, and neglect; and

WHEREAS, it is the responsibility of every adult who comes in contract with a child to protect that child's inalienable right to a safe and nurturing childhood; and

WHEREAS, Camden County has dedicated individuals and organizations, such as the Camden County CASA program, who work daily to counter the problem of child maltreatment and to help parents obtain the assistance they need; and

WHEREAS, our communities are stronger when all citizens become aware of child abuse prevention and become involved in supporting parents to raise their children in a safe and nurturing environment; and

WHEREAS, effective child abuse prevention programs succeed because of partnerships among families, social service agencies, schools, religious and civic organizations, the military community, law enforcement agencies, and the business community; and

WHEREAS, all citizens, community agencies, faith organizations, and businesses will work to increase their efforts to support families; and

NOW, THEREFORE, BE IT RESOLVED that the leaders of the Camden County hereby proclaim the month of April **2014**, to be

Child Abuse Prevention Month

The leaders of our community commend this observance during April 2014 to the citizens of Camden County.

RESOLVED this 1st day of April, 2014.

Jimmy Starline,
Chairman Camden County
Board of County Commissioners

Kenneth Smith,
Mayor
City of Kingsland

John F. Morrissey,
Mayor
City of St. Marys

Steven L. Parrott,
Mayor
City of Woodbine

Harvey L. Guffey, Jr., Capt, USN
Commanding Officer
Naval Submarine Base
Kings Bay

Matt Baer, LCDR, USCG
Commanding Officer
USCG MSST
Kings Bay

Sheila McNeil,
President
The Camden County Partnership

Dr. Will Hardin,
Superintendent
Camden County School System

Jim Proctor,
Sheriff
Camden County

Darryl Griffis,
Chief of Police
City of Kingsland

Tim Hatch,
Chief of Police
City of St. Marys

Mark Crews,
Director Public Safety
Camden County

Dale Blanton,
Vice Chairman
Family Violence Task Force

Jennifer Lewis,
Chief Judge
Magistrate Court of Camden County

Sandee Ortega,
Victim Advocate/Chairman
District Attorney's Office/FVTF

Paula Goodnow,
District Chief of Staff
Rotary Club of Kings Bay

Tricia Jared,
Executive Director
Kingsland DDA/ City of Kingsland

Kimberly Pipkin,
Program Manager
Camden County DJJ

Shaunta Gibbs,
Executive Director
Camden County United Way

Celenda Perry,
Executive Director
Camden Community Alliance and Resources

Howard Sepp,
VP/Administrator
Southeast Georgia Health System
Camden Campus

Jill Helton,
Publisher
Tribune and Georgian

Charlene Sears,
Executive Director
Salvation Army

Steve Howard,
County Administrator

Beth Griffis,
County Director
Department of Family and
Children Services, Camden County

Ruth Thompson,
Chairman of the Board
Camden County CASA Program

O. Brent Green, Judge
Juvenile Court
Camden County

Bridget Wenum,
Executive Director
Camden County CASA

St. Marys, Georgia

Proclamation

Donini's Florist & Nursery

50 year Celebration

WHEREAS, the City of St. Marys congratulates Donini's Florist & Nursery on their 50th Anniversary of business in St. Marys. St. Marys recognizes Donini's Florist & Nursery for their dedication, contributions and superior customer service to citizens of St. Marys and Camden County. Virgil "Red" Donini and Evelyn Hernandez Donini purchased the Florist business in 1964 and moved to their current location at 801 West Hall Street in 1970; and

WHEREAS, Donini's, a third generation family business (Red Donini, Evelyn Donini, Michele Donini Bellisle, Joseph Donini, James Walker and Christopher Bellisle) has contributed countless hours, products and services to the citizens of Camden County through community service projects. The Donini Family was responsible for assisting Cumberland Island National Seashore with replenishing Olive Trees on the island through a complicated process called grafting. Michele Donini Bellisle started recycling many years ago and partnered with MWR at Kings Bay Naval Base for their pots which she in turn issued a check to MWR for the children programs; and

WHEREAS, Red Donini, first generation American Italian moved to St. Marys in 1949 to assist with the Kraft Bag Division of Gilman Paper Company and soon later became the senior engineer operator in the Power House. Mrs. Donini (Evelyn Hernandez Donini) ran the family florist business. Mrs. Donini's (Hernandez) family contributed much to the history of St. Marys. Mayor Ward Hernandez (St. Marys) is Evelyn Hernandez Donini's brother. Mary Powell Drive (St. Marys) is named after Mary Powell who was a City Clerk (St. Marys) for 32 years and a family member. Some of the famous Oak Trees in the county are named after their family members including the one in front of City Hall (median) called the John Rabadan Hernandez; and

WHEREAS, the Donini family members love and deep rooted connection in Camden County after ten generations continues to show their love for the environment and people. Michelle Donini Bellisle continues in her mother and father's tradition with donations to the Downtown Development Authority beautification project in front of the Hernandez Building in 2009 and her support of Orange Hall; and

WHEREAS, it is most appropriate that the City of St. Marys recognize Donini's Florist & Nursery for their continued commitment to the residents, organizations and cities in Camden County.

NOW, THEREFORE, I John F. Morrissey, Mayor of St. Marys, Georgia, do proclaim Donini's Florist & Nursery a devoted and dedicated supporter of St. Marys, Camden County and the Cumberland Island National Seashore.

IN WITNESS WHEREOF, I have hereunto set my hand this 7th day of April, in the year of our Lord Two Thousand and Fourteen.

City of St. Marys, Georgia

By:_____

John F. Morrissey Mayor

Attest:_____

Deborah Walker-Reed, City Clerk

Board Appointment

Library Board

CITY OF ST. MARYS
VOLUNTEER APPLICATION FORM

Today's date: 4/1/14

Name: Maryann Meador

Address: 26 Terra Court

City, State, and Zip: St. Marys, GA 31558

Daytime Phone number: 912 322 2916

Nighttime Phone number:

Date of Birth (optional): 06/16/53

Current Employer: Retired

Position: library board of trustees

What type of volunteer work are you interested in? I'm interested in serving on the library board. I'm an avid reader and member of the St. Marys Library Book Club.

Special Skills: I read a lot!

Times available: open

References:

Bob Nutter	Judy Britt	Jen Gorbett
member of	Library Mgr.	Library Staff
City Council		

St. Marys, Georgia

Proclamation

Donini's Florist & Nursery

50 year Celebration

WHEREAS, the City of St. Marys congratulates Donini's Florist & Nursery on their 50th Anniversary of business in St. Marys. St. Marys recognizes Donini's Florist & Nursery for their dedication, contributions and superior customer service to citizens of St. Marys and Camden County. Virgil "Red" Donini and Evelyn Hernandez Donini purchased the Florist business in 1964 and moved to their current location at 801 West Hall Street in 1970; and

WHEREAS, Donini's, a third generation family business (Red Donini, Evelyn Donini, Michele Donini Bellisle, Joseph Donini, James Walker and Christopher Bellisle) has contributed countless hours, products and services to the citizens of Camden County through community service projects. The Donini Family was responsible for assisting Cumberland Island National Seashore with replenishing Olives Trees on the island through a complicated process called grafting. Michele Donini Bellisle started recycling many years ago and partnered with MWR at Kings Bay Naval Base for their pots which she in turn issued a check to MWR for the children programs; and

WHEREAS, Red Donini, first generation American Italian moved to St. Marys in 1949 to assist with the Kraft Bag Division of Gilman Paper Company and soon later became the senior engineer operator in the Power House. Mrs. Donini (Evelyn Hernandez Donini) ran the family florist business. Mrs. Donini's (Hernandez) family contributed much to the history of St. Marys. Mayor Ward Hernandez (St. Marys) is Evelyn Hernandez Donini's brother. Mary Powell Drive (St. Marys) is named after Mary Powell who was a City Clerk (St. Marys) for 32 years and a family member. Some of the famous Oak Trees in the county are named after their family members including the one in front of City Hall (median) called the John Rabadan Hernandez; and

WHEREAS, the Donini family members love and deep rooted connection in Camden County after ten generations continues to show their love for the environment and people. Michelle Donini Bellisle continues in her mother and father's tradition with donations to the Downtown Development Authority beautification project in front of the Hernandez Building in 2009 and her support of Orange Hall; and

WHEREAS, it is most appropriate that the City of St. Marys recognize Donini's Florist & Nursery for their continued commitment to the residents, organizations and cities in Camden County.

NOW, THEREFORE, I John F. Morrissey, Mayor of St. Marys, Georgia, do proclaim Donini's Florist & Nursery a devoted and dedicated supporter of St. Marys, Camden County and the Cumberland Island National Seashore.

IN WITNESS WHEREOF, I have hereunto set my hand this 7th day of April, in the year of our Lord Two Thousand and Fourteen.

City of St. Marys, Georgia

By:_____
John F. Morrissey Mayor

Attest:_____
Deborah Walker-Reed, City Clerk

CITY COUNCIL MEETING
April 7, 2014

TITLE: CINCO DE MAYO FESTIVAL: *Mi Casa Restaurant*

PURPOSE: Council consideration to approve a one day event for alcohol patio sales.

RECOMMENDATION: The Assembly Permitting Committee recommends approval with stipulations below.

HISTORY: Mi Casa Restaurant currently holds a valid 2014 Alcohol License for indoor sales. Jose Refugio Marquez has requested City Council's approval to serve alcohol in a designated area of the parking lot located at 765 Kings Bay Road, which is indicated on the attached map. The property owners have submitted an authorization letter in support of the event. The event is scheduled for Monday, May 5, 2014 from 6:00 p.m. - 10:00 p.m. One off duty Police Officer will be hired at the owner's expense for the entire event to address any problems that might arise, barricades will be utilized in the parking lot to designate alcohol area.

Department Director: _____

City Manager: _____

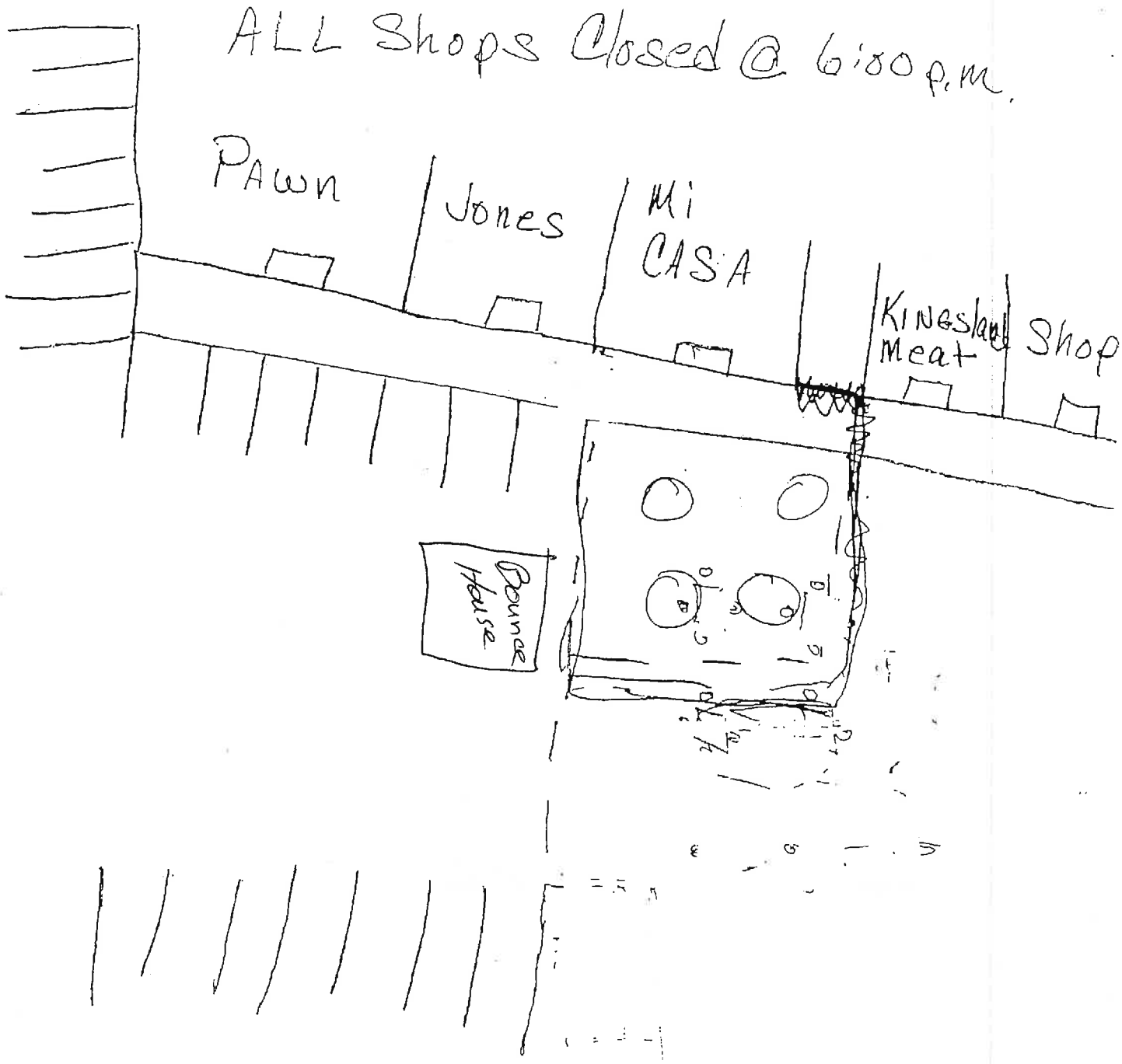
ALL Shops Closed @ 6:00 p.m.
Pawn
Jones
Mi CASA
Kingsland Meat Shop
Bounce House

CITY COUNCIL MEETING
DATE: April 7, 2014

TITLE: Fire Codes

PURPOSE: This is to update the City's Fire Ordinances to match the States Mandated Minimum Standards.

RECOMMENDATION: Fire Chief/ Interim City Manager recommend approval.

HISTORY/ANALYSIS: This is to update the Fire Ordinance so that it matches the State Fire Marshal's Minimum Standards for Fire and Life Safety Codes. We have also removed the editions of the Codes because they are specified by the State Fire Marshal's Office and it will reduce us having to go back into the Ordinance to make minor changes.

Department Director:_____

City Manager:_____

ST. MARYS CITY COUNCIL
ST. MARYS, GEORGIA

At the regular meeting of the St. Marys City Council, held in the St. Marys City Hall, St. Marys, Georgia:

Present:

John F. Morrissey, Mayor
Robert L. Nutter, Councilman, Post 1
Nancy Stasinis, Councilwoman, Post 2
Jim Gant, Councilman, Post 3
David Reilly, Councilman, Post 4
Sam L. Colville, Councilman, Post 5
Linda P. Williams, Councilwoman, Post 6

On motion of _____, which carried _____, the following Ordinance amendment was adopted:

AN AMENDMENT TO THE CODE OF ORDINANCES, CITY OF ST. MARYS, GEORGIA, SECTIONS 50-2, 50-3, 50-5, 50-7, 50-11, 50-12, 50-41, 50-42 AND 50-43 TO PROVIDE FOR CHANGING REFERENCES TO THE "CITY OF ST. MARYS STANDARD FIRE PREVENTION CODE" TO THE "INTERNATIONAL FIRE CODE", AND TO ADOPT THE INTERNATIONAL FIRE CODE BY INCORPORATION AND FOR OTHER PURPOSES AS SET FORTH THEREIN.

Be it, and it is, hereby ordained by the Mayor and Council of the City of St. Marys, this day of _____, 2014 that sections 50-2, 50-3, 50-5, 50-7, 50-11, 50-12, 50-41, 50-42 and 50-43 of the Code of Ordinances, City of St. Marys, Georgia are hereby amended to read as follows:

Sec. 50-2. - Position of fire chief.

The fire chief of the city fire department shall be responsible for the direct administration and enforcement of the City of St. Marys International Fire Code, this chapter and other fire prevention and protection rules, regulations and ordinances. The fire chief of the city fire department may appoint qualified members of the fire department as inspectors as shall from time to time be necessary. The fire chief of the city fire department may also designate such number of inspectors as shall from time to time be authorized by the city. When used in this chapter, the term[s] "fire chief,"

"code official," [or] "fire official" shall include the fire chief and the chief's lawful designees.

Sec. 50-3. - Powers of fire chief.

The fire chief, his designees and fire inspectors are hereby vested with the powers of police officers while acting in their fire department capacity, and are authorized to issue citations for violations of the International Fire Code, this chapter, rules and regulations, or other fire protection ordinances enacted by the city protection ordinances enacted by the city.

Sec. 50-5. - Fire prevention scope.

The provisions of the International Fire Code, this chapter, rules and regulations, and other fire protection ordinances of the city shall apply equally to both public and private property, and shall apply to all structures and their occupancies, except as otherwise specified.

Sec. 50-7. - Inspections.

(a) The fire chief or his assistants and inspectors shall inspect or cause to be inspected all premises on a periodic basis for compliance with the International Fire Code, this chapter, rules and regulations and other fire protection ordinances of the city, and shall make such orders as may be necessary for the enforcement of the laws and ordinances governing the same.

(b) Additionally, upon compliant submitted in writing alleging a failure to comply with the International Fire Code, this chapter, and fire related rules, regulations, and ordinances, the fire chief or assistants or inspectors may enter in or upon any building or premises complained of for the purpose of investigating the complaint.

(c) Additionally, if the fire chief or assistants or inspectors has been deputized by the state safety fire commissioner pursuant to O.C.G.A. § 25-2-12.1 then that person is further authorized to seek inspection warrants against non-cooperating parties pursuant to O.C.G.A. § 25-2-22.1. Inspection warrants may be issued by any judge of the superior, state, municipal or magistrate court upon proper oath or affirmation showing probable cause.

Sec. 50-11. - Permits.

In accordance with requirements as detailed in chapter 4 of the International Fire Code, a permit shall be obtained from the fire chief to conduct certain operations described therein, or to store, handle, or use those processes described therein that are considered to present an extra or unusual fire hazard to life or property. Before permits may be issued, the fire chief or assistants and inspectors shall inspect and approve the

receptacles, processes, vehicles, buildings, storage places or sites to be used for any such purposes. A $10.00 processing fee to cover administrating cost shall be imposed upon each permit application. The city shall revoke or suspend an individual or entity's business license for violation of this section. Violation of this section shall be punished by a fine of up to $1,000.00 and/or imprisonment of up to 30 days.

Sec. 50-12. - Fire lanes.

(a) It shall be unlawful for any person to park or stand a vehicle within a designated fire lane.

(b) A fire lane shall be a 12-foot traffic lane closest to buildings and other structures, unless otherwise designated. The police chief or the fire chief shall be authorized to designate fire lanes within the city by the posting of signs or by marking upon the pavement or roadway, so designating the fire lanes, or by requiring the owner of the property to so designate the fire lane.

(c) This section shall be enforced by any police officer of the city. Citations for violations shall be issued by such officers.

(d) Any person, corporation, partnership or other entity violating this section shall be tried before the municipal court of the city and shall, upon conviction, be subject to up to the maximum fine and/or the maximum term of imprisonment as authorized by the city's Charter.

Sec. 50-41. - Fire prevention code.

There is hereby adopted by the city council that certain code known as the International Fire Code. Reference to this chapter shall include the International Fire Code. This fire code is hereby adopted in its entirety and all codes referenced therein, save and except such portions are hereinafter deleted, modified, or amended in section 50-43, and is hereby incorporated by reference as fully as if set out at length herein and the provisions thereof shall be controlling within the incorporated area of the city. No less than one copy of the International Fire Code is filed at city hall and not less than one copy is filed in the office of the chief of the city fire department.

Sec. 50-42. - Adoption of state code.

In addition to above-referenced International Fire Code, there is hereby adopted by the city council the state minimum fire safety standards as set forth in O.C.G.A. § 25-2-12 and all subsequent revisions thereof. This code is hereby incorporated by reference as fully as if set out at length herein and the provisions thereof shall be controlling within the incorporated area of the city. Furthermore, it is hereby resolved that pursuant to O.C.G.A. § 25-2-12(b), the city will enforce the minimum fire safety standards as set forth in O.C.G.A. § 25-2-12(a).

Sec. 50-43. - Fire prevention code amendments and changes.

The International Fire Code is amended and changed in the following respect.

Amend Chapter 1 of the fire prevention code by deleting sections 105, 105.1, 105.3, and substitute a new section as follows:

> **SEC. 1-5 APPEALS.**
> Whenever the fire chief shall disapprove an application or refuse to grant a permit when applied for, or when it is claimed the provisions of the International Fire Code, this chapter, or other city fire-related rules, regulations, or ordinances do not apply or that the true intent and meaning of the same has been misconstrued or improperly applied, claimant may appeal the decisions to the city council of the City of St. Marys, Georgia, within 30 days from the date of decision.

This Amendment shall become effective upon passage.

ST. MARYS CITY COUNCIL
ST. MARYS, GEORGIA

_____
John F. Morrissey, MAYOR

ATTEST:

_____
DEBORAH WALKER-REED, CITY CLERK
CITY OF ST. MARYS, GEORGIA

EXPLANATION OF CHANGES

NOTE: Deletions are ~~stricken through~~, additions are <u>underlined</u>.

Sec. 50-2. - Position of fire chief.

The fire chief of the city fire department shall be responsible for the direct administration and enforcement of the City of St. Marys ~~Standard~~ <u>International</u> Fire ~~Prevention~~ Code, this chapter and other fire prevention and protection rules, regulations and ordinances. The fire chief of the city fire department may appoint qualified members of the fire department as inspectors as shall from time to time be necessary. The fire chief of the city fire department may also designate such number of inspectors as shall from time to time be authorized by the city. When used in this chapter, the term[s] "fire chief," "code official," [or] "fire official" shall include the fire chief and the chief's lawful designees.

Sec. 50-3. - Powers of fire chief.

The fire chief, his designees and fire inspectors are hereby vested with the powers of police officers while acting in their fire department capacity, and are authorized to issue citations for violations of the ~~Standard~~ International Fire ~~Prevention~~ Code, this chapter, rules and regulations, or other fire protection ordinances enacted by the city protection ordinances enacted by the city.

Sec. 50-5. - Fire prevention scope.

The provisions of the ~~Standard~~ International Fire ~~Prevention~~ Code, this chapter, rules and regulations, and other fire protection ordinances of the city shall apply equally to both public and private property, and shall apply to all structures and their occupancies, except as ~~other wise~~ <u>otherwise</u> specified.

Sec. 50-7. - Inspections.

(a) The fire chief or his assistants and inspectors shall inspect or cause to be inspected all premises on a periodic basis for compliance with the ~~Standard~~ International Fire ~~Prevention~~ Code, this chapter, rules and regulations and other fire protection ordinances of the city, and shall make such orders as may be necessary for the enforcement of the laws and ordinances governing the same.

(b) Additionally, upon compliant submitted in writing alleging a failure to comply with the ~~Standard~~ International Fire ~~Prevention~~ Code, this chapter, and fire related rules, regulations, and ordinances, the fire chief or assistants or inspectors may enter in or upon any building or premises complained of for the purpose of investigating the complaint.

(c) Additionally, if the fire chief or assistants or inspectors has been deputized by the state safety fire commissioner pursuant to O.C.G.A. § 25-2-12.1 then that person is further authorized to seek inspection warrants against non-cooperating parties pursuant to O.C.G.A. § 25-2-22.1. Inspection warrants may be issued by any judge of the superior, state, municipal or magistrate court upon proper oath or affirmation showing probable cause.

Sec. 50-11. - Permits.

In accordance with requirements as detailed in chapter 4 of the ~~Standard~~ International Fire ~~Prevention~~ Code, a permit shall be obtained from the fire chief to conduct certain operations described therein, or to store, handle, or use those processes described therein that are considered to present an extra or unusual fire hazard to life or property. Before permits may be issued, the fire chief or assistants and inspectors shall inspect and approve the receptacles, processes, vehicles, buildings, storage places or sites to be used for any such purposes. A $10.00 processing fee to cover administrating cost shall be imposed upon each permit application. The city shall revoke or suspend an individual or entity's business license for violation of this section. Violation of this section shall be punished by a fine of up to $1,000.00 and/or imprisonment of up to 30 days.

Sec. 50-12. - Fire lanes.

(a) It shall be unlawful for any person to park or stand a vehicle within a designated fire lane.

(b) A fire lane shall be a 12-foot traffic lane closest to buildings and other structures, unless ~~other wise~~ <u>otherwise</u> designated. The police chief or the fire chief shall be authorized to designate fire lanes within the city by the posting of signs or by marking upon the pavement or roadway, so designating the fire lanes, or by requiring the owner of the property to so designate the fire lane.

(c) This section shall be enforced by any police officer of the city. Citations for violations shall be issued by such officers.

(d) Any person, corporation, partnership or other entity violating this section shall be tried before the municipal court of the city and shall, upon conviction, be subject to up to the maximum fine and/or the maximum term of imprisonment as authorized by the city's Charter.

Sec. 50-41. - Fire prevention code.

There is hereby adopted by the city council that certain code known as the ~~Southern Building Code Congress International, Inc., being particularly the 2000 edition of~~

~~Standard Fire Prevention Code~~ International Fire Code. Reference to this chapter shall include the International Fire Code. This fire code is hereby adopted in its entirety and all codes referenced therein, save and except such portions are hereinafter deleted, modified, or amended in section 50-43, and is hereby incorporated by reference as fully as if set out at length herein and the provisions thereof shall be controlling within the incorporated area of the city. No less than one copy of the ~~Standard~~ International Fire ~~Prevention~~ Code is filed at city hall and not less than one copy is filed in the office of the chief of the city fire department.

Sec. 50-42. - Adoption of state code.

In addition to above-referenced ~~Standard~~ International Fire ~~Prevention~~ Code, there is hereby adopted by the city council the state minimum fire safety standards as set forth in O.C.G.A. § 25-2-12 and all subsequent revisions thereof. This code is hereby incorporated by reference as fully as if set out at length herein and the provisions thereof shall be controlling within the incorporated area of the city. Furthermore, it is hereby resolved that pursuant to O.C.G.A. § 25-2-12(b), the city will enforce the minimum fire safety standards as set forth in O.C.G.A. § 25-2-12(a).

Sec. 50-43. - Fire prevention code amendments and changes.

The ~~Standard Fire Prevention Code of the Southern Building Code Congress International, Inc.,~~ International Fire Code is amended and changed in the following respect.

Amend Chapter 1 of the fire prevention code by deleting sections 105, 105.1, 105.3, and substitute a new section as follows:

> **SEC. 1-5 APPEALS.**
> Whenever the fire chief shall disapprove an application or refuse to grant a permit when applied for, or when it is claimed the provisions of the ~~Standard~~ International Fire ~~Prevention~~ Code, this chapter, or other city fire-related rules, regulations, or ordinances do not apply or that the true intent and meaning of the same has been misconstrued or improperly applied, claimant may appeal the decisions to the city council of the City of St. Marys, Georgia, within 30 days from the date of decision.

CITY COUNCIL MEETING
DATE: April 7, 2014

TITLE: Building Codes

PURPOSE: This is to update the City's Building Ordinances to match the States mandated Minimum Standards, and to approve appendixes for Flood Elevation and Wind Speed.

RECOMMENDATION: Building Official/ Interim City Manager recommend approval.

HISTORY/ANALYSIS: The Georgia Department of Community Affairs (DCA) regulates the States Minimum Codes, as well as the edition, for compliance for building construction. With the modifications, by not identifying the editions, will reduce the City from having to go back into the ordinance to change the editions. DCA controls the editions so by referencing the DCA's adopted codes we will be in compliance.

The appendixes are recommendations by DCA that came about by the Codes reducing some of their requirements on Wind Speed and Elevation. By approving the appendixes the Wind speed will remain as it was in the last edition (120 mph) and the Elevation will match the Ordinance recently passed by Council for the Flood Ordinance (two board feet minimum elevation).

City Manager:_____

ST. MARYS CITY COUNCIL
ST. MARYS, GEORGIA

At the regular meeting of the St. Marys City Council, held in the St. Marys City Hall, St. Marys, Georgia:

Present:

John F. Morrissey, Mayor
Robert L. Nutter, Councilman, Post 1
Nancy Stasinis, Councilwoman, Post 2
Jim Gant, Councilman, Post 3
David Reilly, Councilman, Post 4
Sam L. Colville, Councilman, Post 5
Linda P. Williams, Councilwoman, Post 6

On motion of _____, which carried _____, the following Ordinance amendment was adopted:

AN AMENDMENT TO THE CODE OF ORDINANCES, CITY OF ST. MARYS, GEORGIA, SECTION 18-1 TO PROVIDE FOR ADOPTION BY REFERENCE AND INCORPORATION DIFFERENT BUILDING CODES AND REGULATIONS AS STATED, AND FOR OTHER PURPOSES AS SET FORTH THEREIN.

Be it, and it is, hereby ordained by the Mayor and Council of the City of St. Marys, this day of _____, 2014 that section 18-1 of the Code of Ordinances, City of St. Marys, Georgia is hereby amended to read as follows:

Sec. 18-1. - Codes adopted.

(a) The City of St. Marys hereby adopts by reference and will enforce the following standard codes, as adopted and amended by the Georgia Department of Community Affairs. The following appendices of these codes hereafter set forth are adopted for enforcement by reference as if the same were fully set forth herein, to-wit:

(1) International Building Code (IBC) - including Georgia Amendments and Appendix N in its entirety with Flood Elevation Option B and Minimum Wind Speed Option C in their entirety.

(2) International Residential Building Code - including Georgia Amendments and Appendix R in its entirety with Flood Elevation Option B and Minimum Wind Speed Option C in their entirety.
(3) International Mechanical Code - including Georgia Amendments.
(4) International Fuel Gas Code - including Georgia Amendments.
(5) International Plumbing Code - including Georgia Amendments.
(6) National Electrical Code - NFPA 70 including Georgia Amendments.
(7) International Energy Conservation Code - including Georgia Amendments.
(8) International Property Maintenance Code - including Georgia Amendments.
(9) International Fire Code - including Georgia Amendments.
(10) Life Safety Code – NFPA 101 including Georgia Amendments.
(11) International Swimming Pool and Spa Code- including Georgia Amendments.

(b) The purpose of this article is to provide for the administration and enforcement of the Georgia State Minimum Standard Codes as heretofore adopted. Hereinafter all of the codes heretofore adopted shall be referred to as the "technical codes".

(c) These codes are hereby declared to be remedial, and shall be construed to secure the beneficial interests and purposes thereof which are public safety, health, and general welfare through structural strength, stability, sanitation, adequate light and ventilation, and safety to life and property from fire and other hazards attributed to the built environment including alteration, repair, removal, demolition, use and occupancy of buildings, structures, or premises, and by regulating the installation and maintenance of all electrical, gas, mechanical and plumbing systems, which may be referred to as service systems.

(d) Federal and state authority. The provisions of these codes shall not be held to deprive any federal or state agency, or any applicable governing authority having jurisdiction, or any power or authority which it had on the effective date of the adoption of these codes or of any remedy then existing for the enforcement of its orders, nor shall it deprive any individual or corporation of its legal rights as provided by law.

(e) Appendices. Appendices referenced in the code text of the technical codes shall be considered an integral part of the codes.

(f) Referenced standards. Standards referenced in the text of the technical codes shall be considered an integral part of the codes. If specific portions of a standard are denoted by code text, only those portions of the standard shall be enforced. Where code provisions conflict with a standard, the code provisions shall be enforced. Permissive and advisory provisions in a standard shall not be construed as mandatory.

(g) Maintenance. All buildings, structures, electrical, gas, mechanical and plumbing systems, both existing and new, and all parts thereof, shall be maintained in a safe and sanitary condition. All devices or safeguards which are required by the technical codes when constructed, altered, or repaired, shall be maintained in good working order. The owner, or his designated agent, shall be responsible for the maintenance of buildings, structures, electrical, gas, mechanical and plumbing systems.

(h) All codes listed above shall be enforced jointly and/or separately by the building department and/or the fire department, and/or the code enforcement officer in accordance with state and local law.

This Amendment shall become effective upon passage.

ST. MARYS CITY COUNCIL
ST. MARYS, GEORGIA

_____
John F. Morrissey, MAYOR

ATTEST:

_____
DEBORAH WALKER-REED, CITY CLERK
CITY OF ST. MARYS, GEORGIA

EXPLANATION OF CHANGES

NOTE: Deletions are ~~stricken through~~, additions are underlined.

Sec. 18-1. - Codes adopted.

(a) The City of St. Marys hereby adopts by reference and will enforce the following standard codes, as adopted and amended by the Georgia Department of Community Affairs. The following appendices of these codes hereafter set forth are adopted for enforcement by reference as if the same were fully set forth herein, to-wit:

(1) International Building Code (IBC) ~~-2006 Edition~~ including Georgia Amendments and Appendix N in its entirety with Flood Elevation Option B and Minimum Wind Speed Option C in their entirety.

(2) International Residential Building Code - ~~2006 Edition~~ including Georgia Amendments and Appendix R in its entirety with Flood Elevation Option B and Minimum Wind Speed Option C in their entirety.

(3) International Mechanical Code - ~~2006 Edition~~ including Georgia Amendments.

(4) International Fuel Gas Code ~~-2006 Edition~~ including Georgia Amendments.

(5) International Plumbing Code - ~~2006 Edition~~ including Georgia Amendments.

(6) National Electrical Code - NFPA 70 including Georgia Amendments.

(7) International Energy Conservation Code - ~~2006 Edition~~ including Georgia Amendments.

(8) International Property Maintenance Code ~~-2006 Edition~~ including Georgia Amendments.

(9) International Fire Code - ~~2006 Edition as enforced by the St. Marys Fire Department~~ including Georgia Amendments.

(10) ~~NFPA 101~~ Life Safety Code - 2000 Edition ~~as enforced by the St. Marys Fire Department~~ including Georgia Amendments.

(11) ~~National Fire Protection Association (NFPA) Code - latest editions of all sections as enforced by the St. Marys Fire Department~~. International Swimming Pool and Spa Code- including Georgia Amendments.

~~(12) 1999 SSTD 10-99, Standard for Hurricane-Resistant Residential Construction.~~

~~(13) FEMA Technical Bulletin (August 2008) - Free of Obstruction Requirements.~~

(b) The purpose of this article is to provide for the administration and enforcement of the Georgia State Minimum Standard Codes as heretofore adopted. Hereinafter all of the codes heretofore adopted shall be referred to as the "technical codes".

(c) These codes are hereby declared to be remedial, and shall be construed to secure the beneficial interests and purposes thereof which are public safety, health, and general welfare through structural strength, stability, sanitation, adequate light and ventilation, and safety to life and property from fire and other hazards attributed to the built environment including

alteration, repair, removal, demolition, use and occupancy of buildings, structures, or premises, and by regulating the installation and maintenance of all electrical, gas, mechanical and plumbing systems, which may be referred to as service systems.

(d) Federal and state authority. The provisions of these codes shall not be held to deprive any federal or state agency, or any applicable governing authority having jurisdiction, or any power or authority which it had on the effective date of the adoption of these codes or of any remedy then existing for the enforcement of its orders, nor shall it deprive any individual or corporation of its legal rights as provided by law.

(e) Appendices. Appendices referenced in the code text of the technical codes shall be considered an integral part of the codes.

(f) Referenced standards. Standards referenced in the text of the technical codes shall be considered an integral part of the codes. If specific portions of a standard are denoted by code text, only those portions of the standard shall be enforced. Where code provisions conflict with a standard, the code provisions shall be enforced. Permissive and advisory provisions in a standard shall not be construed as mandatory.

(g) Maintenance. All buildings, structures, electrical, gas, mechanical and plumbing systems, both existing and new, and all parts thereof, shall be maintained in a safe and sanitary condition. All devices or safeguards which are required by the technical codes when constructed, altered, or repaired, shall be maintained in good working order. The owner, or his designated agent, shall be responsible for the maintenance of buildings, structures, electrical, gas, mechanical and plumbing systems.

(h) All codes listed above shall be enforced jointly and/or separately by the building department and/or the fire department, and/or the code enforcement officer in accordance with state and local law.

(Ord. of 3-7-11(2), § 2)

Georgia State
International Residential Code

Appendix R
Disaster Resilient Construction
(2012 Edition)

Georgia Department of Community Affairs
Local Government Assistance Division
60 Executive Park South, N.E.
Atlanta, Georgia 30329-2231
(404) 679-3118
www.dca.ga.gov

January 1, 2013

TABLE OF CONTENTS

CHAPTER AR1 Scope and Administration 8
Section
AR101 Administration 8
AR102 Applicability 8
AR103 Post Disaster Event Inspections Guidelines . . . 9

CHAPTER AR2 Definitions 11
Section
AR201 General 11
AR202 Definitions 11

CHAPTER AR3 Flood-resistant Construction 12
Section
AR301 Hazard Identification 12
AR302 Scope 12
AR303 Flood Damage-Resistant Materials 12

CHAPTER AR4 High-wind Resistive Construction 13
Section
AR401 General 13
AR402 Option A – Minimum Wind Speed 100 MPH .13
AR403 Option B – Minimum Wind Speed 110 MPH .19
AR404 Option C – Minimum Wind Speed 120 MPH .19
AR405 Option D – Minimum Wind Speed 130 MPH .19
AR406 Fasteners and Connectors for Cladding 19
AR407 Fenestrations 19
AR408 Roofing 20

CHAPTER AR5 Residential Storm Shelters and Safe Rooms 21
Section
AR501 General 21
AR502 Residential Storm Shelters and Safe Rooms . . .21

CHAPTER AR6 Resources 22
Section
AR601 Contacts 22
AR602 Emergency Inspection Kit 22
AR603 Safety Tips 23
AR604 Major Disaster Process 23
AR605 Sample Evaluation Forms and Inspected Placards 23

CHAPTER AR7 References 30

INDEX OF FIGURES 30

APPENDIX R
DISASTER RESILIENT CONSTRUCTION

CHAPTER AR1
SCOPE AND ADMINISTRATION

SECTION AR101
ADMINISTRATION

AR101.1 Purpose. The scope of this appendix is to promote enhanced public health, safety and general welfare and to reduce public and private property losses due to hazards and natural disasters associated with flooding, high-winds, and windborne debris above that which is provided in the general provisions of this appendix.

AR101.2 Objectives. The objectives of this appendix are to:

1. Protect human life, to minimize property loss and to minimize the expenditures of public money associated with natural weather related disasters, including flooding, tornadoes and other high-wind events.
2. Establish enhanced design and construction regulations consistent with nationally recognized good practices for the safeguarding of life and property.

AR101.3 Scope.

AR101.3.1 The provisions of this appendix are not mandatory unless specifically referenced in an adopting ordinance of **[NAME OF JURISDICTION]**. If adopted, the provisions shall apply to all new development and to substantial improvements to existing development.

AR101.3.2 The provisions of this appendix supplement the jurisdiction's building codes to provide for enhanced provisions to mitigate the hazard to life and property from natural weather related disasters, including flooding, tornadoes and other high-wind events.

AR101.3.3 The provisions of this appendix establish design and construction standards for storm shelters.

AR101.4 Violations. Any violation of a provision of this appendix or failure to comply with a permit of variance issued pursuant to this appendix or any requirement of this appendix shall be handled in accordance with the ordinances of **[NAME OF JURISDICTION]**.

SECTION AR102
APPLICABILITY

AR102.1 General. This appendix provides enhanced minimum requirements for development of new construction and substantial improvement of existing development above that contained in the *International Residential Code* (IRC).

AR102.1.1 Regardless of the category of work being performed, the work shall not cause the structure to become unsafe or adversely affect the performance of the building; shall not cause an existing mechanical or plumbing system to become unsafe, hazardous, insanitary or overloaded; and unless expressly permitted by these provisions, shall not make the building any less compliant with this appendix or to any previously approved alternative arrangements than it was before the work was undertaken.

AR102.1.2 Where there is a conflict between a requirement of the *International Residential Code* and a requirement of this appendix, the requirement of this appendix shall govern. Where there is a conflict between a general requirement of this appendix and a specific requirement of this appendix, the specific requirement shall govern. Where, in any specific case, different sections of this appendix specify different materials, methods of construction or other requirements, the most restrictive shall govern.

AR102.2 Other laws. The provisions of this appendix shall not be deemed to nullify any provisions of local, state or federal law.

AR102.3 Referenced codes and standards. The codes and standards referenced in this appendix shall be those that are listed in Chapter AR7 and such codes and standards shall be considered as part of the requirements of this appendix to the prescribed extent of each such reference. Where differences occur between provisions this appendix and references and standards, the provisions of this appendix shall apply.

SECTION AR103
POST DISASTER EVENT INSPECTIONS GUIDELINES

AR103.1 Inspections. The building official or agents shall inspect residential buildings and structures to determine the habitability of each with the goal of getting the community back into their residences quickly and safely. Inspections shall always be performed by teams of at least two individuals, also known as disaster assessment teams.

AR103.1.1 Right of entry. Unless permitted under the exigent circumstances provisions or from an order from State or Federal Authorities, disaster assessment teams shall confirm the right of entry requirements with the incident commander. Upon approval, the assessment teams shall be authorized to enter the structure or premises at reasonable times to inspect or perform duties as provided by this code, provided that the structure or premises be occupied, that credentials are presented, that entry is requested, and that entry is granted by the owner or person having charge over the structure or premises.

AR103.2 Types of inspections.

AR103.2.1 Rapid evaluation. Rapid evaluation is performed after a disaster event to determine if a building is apparently safe or obviously unsafe. The evaluation should last 10 to 30 minutes per building and shall be performed by the building official and/or their designated responders. Evaluation shall determine if a detailed evaluation is necessary. Placards are posted on buildings indicating status as one of the following:

1. INSPECTED
2. RESTRICTED USE
3. UNSAFE

See Section AR605 for Placards that may be reproduced for use in the field during evaluations. The jurisdiction shall alter placards to meet the jurisdiction and building department's requirements.

AR103.2.2 Detailed evaluation. Detailed evaluation is a thorough visual examination of a damaged building performed by a team of two, including an inspector and a design professional. Evaluation should last 30 minutes to 4 hours per building. Evaluation shall determine necessary restrictions on a damaged building's use, the need for an engineering evaluation or to evaluate postings.

AR103.2.3 Engineering evaluation. When indicated by the building official as necessary, engineering evaluations shall be completed by a registered design professional hired by the building owner.

AR103.3 Post disaster building safety evaluation Chart. See Figure AR103.3 for Post Disaster Building Safety Evaluation Chart.

AR103.4 Evaluation forms. *ATC-45 Rapid Evaluation Safety Assessment Form* and *ATC-45 Detailed Evaluation Safety Assessment Form* shall be used by **[NAME OF JURISDICTION]'s** Building Official for post disaster inspections. See Section AR605 for copies of the Safety Assessment Forms.

AR103.5 Placement and removal of placards.

AR103.5.1 Placement. Placards are to be posted in a clearly visible location near the main entrance and shall be visible from the public right-of-way. In addition RESTRICTED USE or UNSAFE placards shall be placed at all entrances.

AR103.5.2 Removal. Placards shall not be removed or replaced, except by the authorized representatives of the local jurisdiction.

Figure AR103.3 Post Disaster Building Safety Evaluation Chart [a]

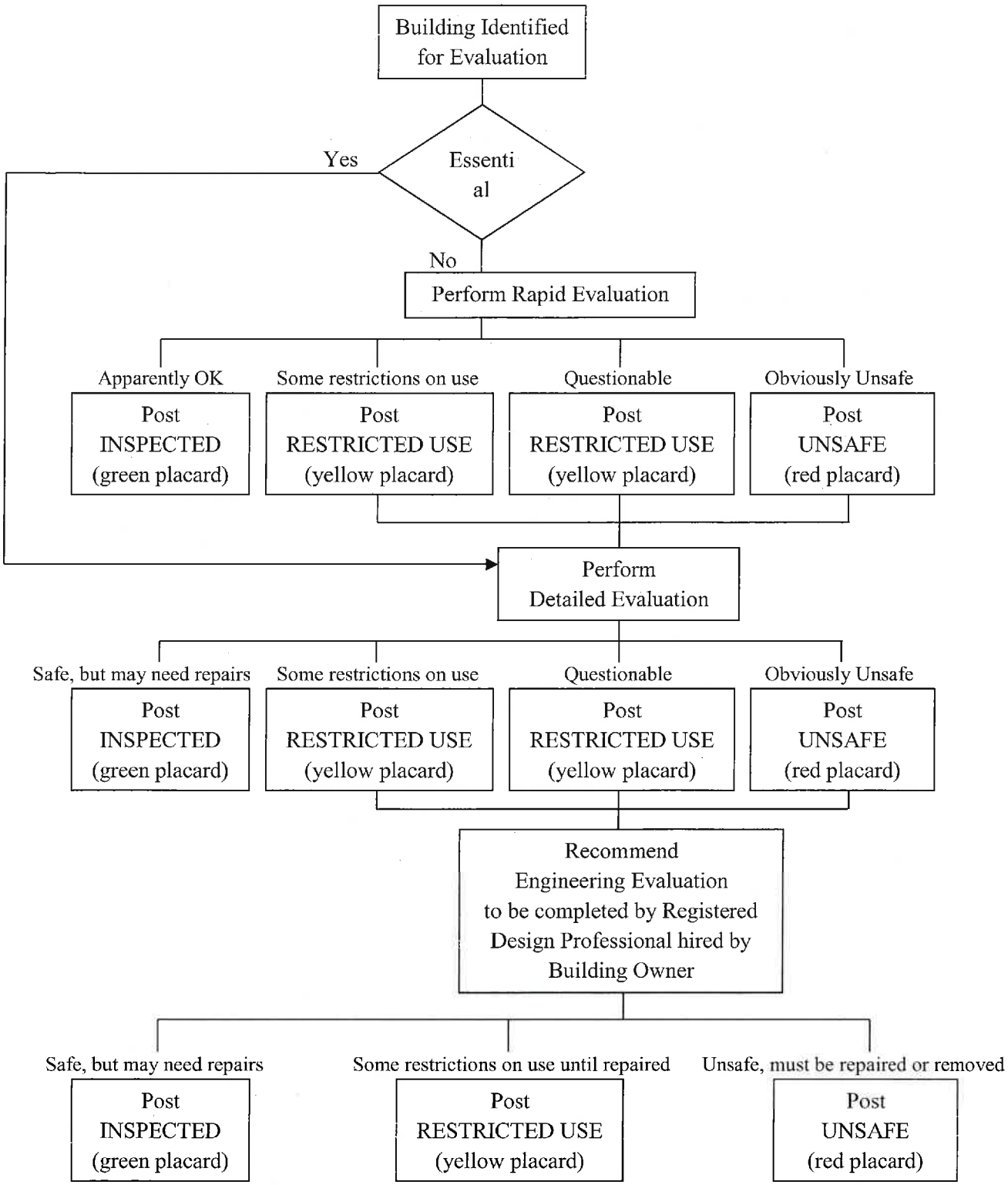

[a] *When Disaster Strikes* by the International Code Council, Inc., Seventh Printing: November 2011, copyright 2007

CHAPTER AR2
DEFINITIONS

SECTION AR201
GENERAL

AR201.1 Scope. Unless otherwise expressly stated the following words and terms shall, for the purposes of this appendix, have the meanings shown in this chapter.

AR201.2 Terms defined in other codes. Where terms are not defined in this appendix and are defined in other *International Codes*, such terms shall have the meanings ascribed to them as in those codes.

AR201.3 Terms not defined. Where terms are not defined through the methods authorized by this section, such terms shall have their ordinarily accepted meanings such as the context implies.

SECTION AR202
DEFINITIONS

500-YEAR FLOOD. Flood having a 0.2% annual probability of being equaled or exceeded.

ADVISORY BASE FLOOD ELEVATION (ABFE). An advisory base flood elevation (BFE) issued by the Federal Emergency Management Agency (FEMA) that reflects post-storm conditions and vulnerability to damages from future flooding.

BASE FLOOD. Flood having a 1% chance of being equaled or exceeded in any given year, also referred to as the 100-year flood.

BASE FLOOD ELEVATION (BFE). The elevation of flooding, including wave height, having a 1% chance of being equaled or exceeded in any given year established relative to the National Geodetic Vertical Datum (NGVD), North American Vertical Datum (NAVD) or other datum specified on the *Flood Insurance Rate Map* (FIRM).

BUILDING OFFICIAL. The officer or other designated authority charged with the administration and enforcement of the *International Residential Code*, or the building official's duly authorized representative.

DESIGN FLOOD. The greater of the following two flood events:

(1) The *base flood*, affecting those areas identified as *special flood hazard areas* on the community's FIRM;

(2) The flood corresponding to the area designated as a *flood hazard area* on a community's *flood hazard map* or otherwise legally designated.

DESIGN FLOOD ELEVATION (DFE). The elevation of the *design flood*, including wave height, relative to the datum specified on the community's legally designated flood hazard map. In areas designated as Zone AO, the *design flood elevation* shall be the elevation of the highest existing grade of the building's perimeter plus the depth number (in feet) specified on the flood hazard map.

FLOOD [DAMAGE]-RESISTANT MATERIAL. Any building product [material, component or system] capable of withstanding direct and prolonged contact with floodwaters without sustaining significant damage.

FLOOD HAZARD AREA. The area subject to flooding during the *design flood.*

FLOOD HAZARD MAP. Map delineating *flood hazard areas* adopted by the authority having jurisdiction.

FLOOD INSURANCE RATE MAP (FIRM). An official map of a community on which the Federal Emergency Management Agency (FEMA) has delineated both the *special flood hazard areas* and the risk premium zones applicable to the community.

FREEBOARD. A factor of safety expressed in feet above a flood level for purposes of floodplain management.

FUTURE-CONDITIONS FLOOD. The flood having a 1% chance of being equaled or exceeded in any given year based on future-conditions hydrology. Also known as the 100-year future-conditions flood.

FUTURE-CONDITIONS FLOOD ELEVATION. The flood standard equal to or higher than the Base Flood Elevation. The future-conditions flood elevation is defined as the highest water surface anticipated at any given point during the future-conditions flood.

CHAPTER AR3
FLOOD-RESISTANT CONSTRUCTION

Forward: This appendix provides three different options for increased freeboard. The jurisdiction may pick only one option that is higher than previously adopted and enforced by the jurisdiction. The National Flood Insurance Program (NFIP) minimum standards reference Base Flood Elevation without any freeboard in high risk flood hazard areas. Due to the flood damage prevention updates performed during the Map Modernization initiative that led to flood risks being digitally identified in all 159 Georgia counties, all Georgia NFIP participating communities have freeboard standards that meet or exceed the 1 foot standard used in the State model ordinances for areas where BFEs have been established.

SECTION AR301
HAZARD IDENTIFICATION

AR301.1 Identification of flood hazard areas. To establish flood hazard areas:

(a) flood hazard map adopted by jurisdiction based on areas of special flood hazard as identified by the Federal Emergency Management Agency in an engineering report entitled "The Flood Insurance Study of **[INSERT NAME OF JURISDICTION]**," dated **[INSERT DATE ISSUANCE]**, and amended or revised with the accompanying Flood Insurance Rate Map (FIRM) and Flood Boundary and Floodway Map (FBFM) and related supporting data along with any revisions thereto.

(b) FIRM maps provided by the Federal Emergency Management Agency.

SECTION AR302
SCOPE

AR302.1 Flood loads. Buildings designed and constructed in flood hazard areas defined in Table R301.2(1) of the *International Residential Code* shall comply with the following:

AR302.1.1 Flood hazard areas without base flood elevations. In flood hazard areas without base flood or future-conditions flood elevation data, new construction and substantial improvements of existing structures shall have the lowest floor of the lowest enclosed area (including basement) elevated no less than three (3) feet above the highest adjacent grade to the building foundation.

OPTION A – FLOOD ELEVATION

AR302.1.2 Increase to base flood elevation requirements. Floors required by ASCE 24 to be built above base flood elevations as follows:

The higher of:

(a) Design flood elevation plus one (1) foot, or
(b) Base flood elevation plus one (1) foot, or
(c) Advisory base flood elevation, or
(d) Future-conditions plus one (1) foot, if known or
(e) 500-year flood, if known

OPTION B– FLOOD ELEVATION

AR302.1.3 Increase to base flood elevation requirements. Floors required by ASCE 24 to be built above base flood elevations as follows:

The higher of:

(a) Design flood elevation plus two (2) feet, or
(b) Base flood elevation plus two (2) feet, or
(c) Advisory base flood elevation, or
(d) Future-conditions plus one (1) foot, if known or
(e) 500-year flood, if known

OPTION C – FLOOD ELEVATION

AR302.1.4 Increase to base flood elevation requirements. Floors required by ASCE 24 to be built above base flood elevations as follows:

The higher of:

(a) Design flood elevation plus three (3) feet, or
(b) Base flood elevation plus three (3) feet, or
(c) Advisory base flood elevation, or
(d) Future-conditions plus one (1) foot, if known or
(e) 500-year flood, if known

SECTION AR303
FLOOD DAMAGE-RESISTANT MATERIALS

AR303.1 Flood damage-resistant materials. Flood damage-resistant materials comply with FEMA Technical Bulletin 2, Table 2. Types, Uses, and Classifications of Materials.

AR303.2 Location of flood damage-resistant materials. Building components and materials located below the increase to base flood elevation as determined by the local jurisdiction in accordance with AR302.1 shall be flood damage-resistant as defined by Section AR303.1.

AR303.3 Fasteners and connectors used for flood damage-resistant materials. Fasteners and connectors used for flood damage-resistant materials to be made of stainless steel, hot-dipped zinc-coated galvanized steel, mechanically deposited-zinc coated, silicon bronze or copper. Copper fasteners shall not be permitted for use in conjunction with steel.

CHAPTER AR4
HIGH-WIND RESISTIVE CONSTRUCTION

Forward: This appendix provides four different options for increased wind speed. The jurisdiction may pick only one option that is higher than the mapped wind speed shown in the International Residential Code.

SECTION AR401
GENERAL

AR401.1 Scope. The provisions of this appendix shall govern the structural design of one- and two-family dwellings (townhouses) not more than three stories in height with separate means of egress and their accessory structures. The building or structure shall comply with all aspects of the International Residential Code in addition to the requirements of this appendix.

AR401.2 Continuous load path. A continuous load path shall be provided to transmit the applicable forces from the roof assembly to the foundation.

AR401.3 Adoption of wind speed. [INSERT NAME OF JURISDICTION] adopts Option **[PICK A, B, C, or D]** MINIMUM WIND SPEED **[INSERT WIND SPEED]**.

AR401.4 Alternative materials, design and methods of construction and equipment. The provisions of this appendix are not intended to prevent the installation of any material or to prohibit any design or method of construction not specifically prescribed by this appendix, provided such material is listed and tested for such application intended. An alternative material, design or method of construction shall be *approved* where the *building official* finds that the proposed design is satisfactory and complies with the intent of the provisions of this appendix, and that the material, method or work offered is, for the purpose intended, at least the equivalent of that prescribed in this appendix. Compliance with the specific performance-based provisions of the International Codes in lieu of specific requirements of this appendix shall also be permitted as an alternate.

AR401.4.1 Tests. Whenever there is insufficient evidence of compliance with the provisions of this appendix, or evidence that a material or method does not conform to the requirements of this appendix, or in order to substantiate claims for alternative materials or methods, the *building official* shall have the authority to require tests as evidence of compliance to be made at no expense to the *jurisdiction*. Test methods shall be as specified in this appendix or by other recognized test standards. In the absence of recognized and accepted test methods, the *building official* shall approve the testing procedures. Tests shall be performed by an *approved* agency. Reports of such tests shall be retained by the *building official* for the period required for retention of public records.

SECTION AR402
OPTION A – MINIMUM WIND SPEED 100 MPH

AR402.1 Wind speed. *Buildings* shall be designed and constructed to comply with minimum wind speed of 100 mph Exposure B in accordance with AR402.1.1 or in accordance with Prescriptive Method AR402.2. Buildings with minimum wind speed of 100 mph Exposure C shall be in accordance with AR402.1.1.

AR402.1.1 Design methods. The design of buildings for wind loads shall be in accordance with one or more of the following methods:

1. *AF&PA Wood Frame Construction Manual (WFCM),* or
2. AF&PA *Wood Frame Construction Manual* Guide to Wood Construction in High Wind Areas for One- and Two-Family Dwellings: 100 MPH Exposure B (WFCM); or
3. ICC *Standard for Residential Construction in High-Wind Regions* (ICC 600); or
4. ASCE *Minimum Design Loads for Buildings and Other Structures* (ASCE 7); or
5. AISI *Standard for Cold-Formed Steel Framing – Prescriptive Method For One- and Two-Family Dwellings* (AISI S230); or
6. *International Building Code*; or
7. *Concrete walls in accordance with R404 and R611of the International Residential Code*; or
8. *Walls of structural insulated panels in accordance with R613 of the International Residential Code.*

AR402.2 Prescriptive wood frame construction method deemed to comply with 100 MPH Exposure B. Prescriptive construction method for wood frame structures shall be in accordance with IRC requirements for 100 mph Exposure B construction as modified in this section. A continuous load path shall be provided to transmit uplift forces from the roof assembly to the ground as follows:

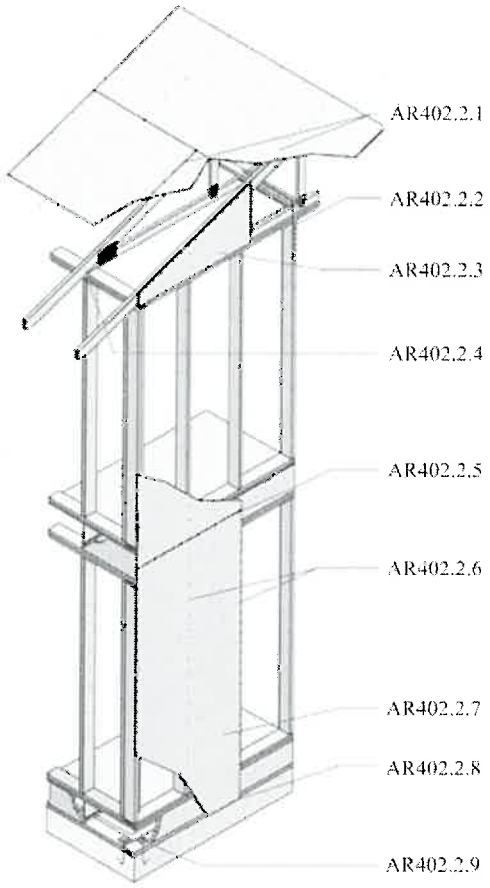

Figure AR402.2[b]

(b) Form No. M310B © 2011 APA – The Engineered Wood Association.

AR402.2.1 Roof sheathing attachment. Nail roof sheathing with 8d ring shank (or deformed shank) (0.131" x 2-1/2") nails at 4 inches on center along the ends of the sheathing and gable end framing 6 inches on center along intermediate framing. See Figure AR402.2.1.

AR402.2.2 Gable end wall connection. Tie gable end walls back to the structure. See Figure AR402.2.2.

AR402.2.3 Gable end wall sheathing. Continuously sheath gable end walls with wood structural panels or equivalent approved material meeting loading requirements. See Figure AR402.2.3.

AR402.2.4 Roof framing to wall connection. Connect roof framing to wall using an approved connector or connectors having allowable loads when attached to Southern Pine or Douglas Fir lumber of 585 pounds in the upward direction, 485 pounds in the direction parallel to the wall and 165 pounds in the direction perpendicular to the wall. Attachment to be on exterior face of the exterior walls. See Figure AR402.2.4.

AR402.2.5 Sheathing attachment at elevated floor level. Nail upper story sheathing and lower story sheathing into common wood structural panel or engineered rim board. See Figure AR402.2.5.

AR402.2.6 Wall sheathing attachment. Attach wall sheathing with 8d common (0.131" x 2-1/2") nails at 4 inches on center at end and edges of wood structural panels and 6 inches on center in the intermediate framing. See Figure AR402.2.6a. Adjacent edges in wood structural panel wall sheathing that do not occur over common framing members shall be attached to flat wise blocking as illustrated in Figure AR402.2.6b.

AR402.2.7 Continuous wall sheathing. Continuously sheath all walls with wood structural panels or equivalent approved material meeting loading requirements. Continuously sheath areas around openings for windows and doors. Minimum wall bracing requirements shall be in accordance with IRC Section R602.10 or R602.12 continuous sheathing methods as modified in Section AR402.2.

AR402.2.8 Wall sheathing to sill plate connection. Extend sheathing material to lap the sill plate. See Figure AR402.2.8.

AR402.2.9 Anchor bolt connection. Space ½" anchor bolts with 7 inches of embedment 48 inches on center with 0.229" x 3" x 3" square plate washers with slotted holes. See Figure AR402.2.9. There shall be a minimum of 2 bolts per plate section with one bolt located not more than 12" or less than 3.5" from each end of the plate section.

AR402.2.10 Top plate intersection detail. Double top plates shall be provided at the top of all exterior stud walls. The double plates shall overlap at corners and at intersections with other exterior or interior load bearing walls. Double top plates shall be lap-spliced with end joints offset in accordance with the minimum requirements given in the *WFCM Guides to Wood Construction in High Wind Areas for One- and Two-Family Dwellings: 100 MPH Exposure B.* See Figure AR402.2.10.

AR402.3 Wall openings. Uplift load path connections at wall openings shall be in accordance with IRC Section R602.3.5.

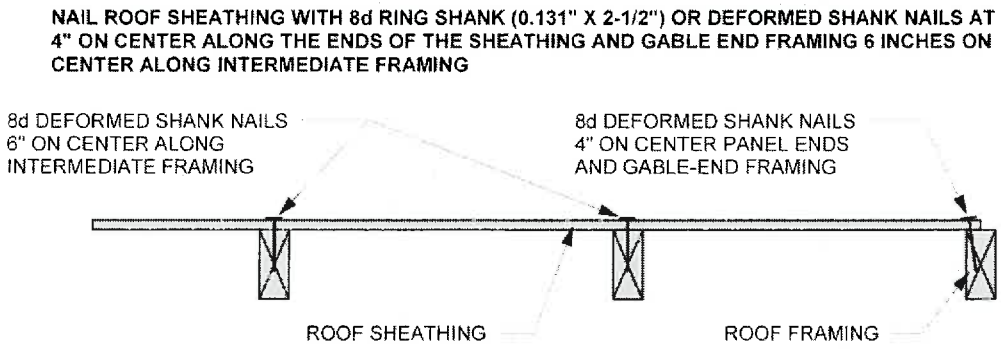

Figure AR402.2.1[b]
Roof Sheathing Attachment Detail

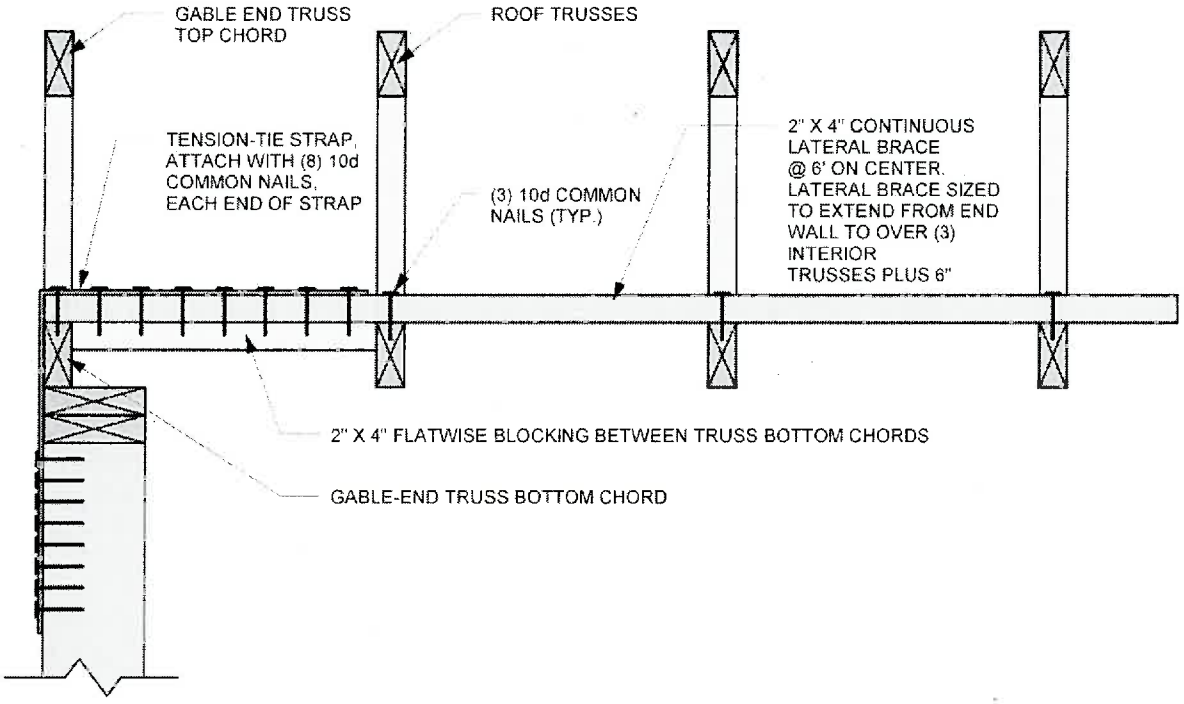

Figure AR402.2.2[b]
Gable End Wall Connection Detail

SHEATH GABLE END WALLS WITH WOOD STRUCTURAL PANELS OR EQUIVALENT APPROVED MATERIAL MEETING LOADING REQUIREMENTS

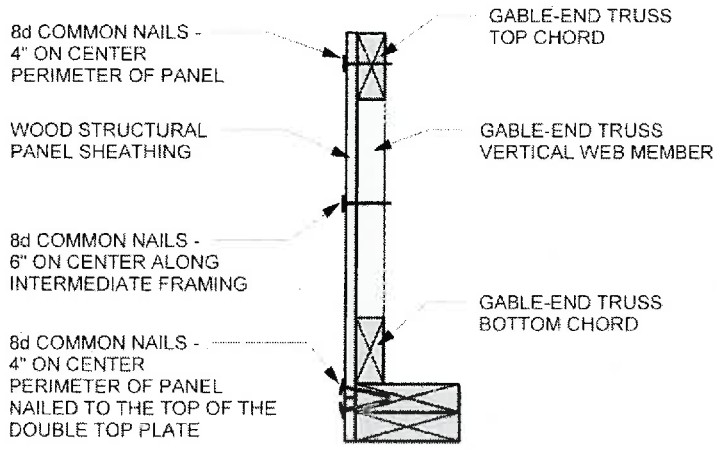

Figure AR402.2.3[b]
Gable End Wall Sheathing Detail

ROOF FRAMING TO WALL CONNECTION WITH FRAMING ANCHOR TO MEET UPLIFT AND SHEAR CAPACITY ATTACHED ON SHEATHING SIDE OF THE EXTERIOR WALLS

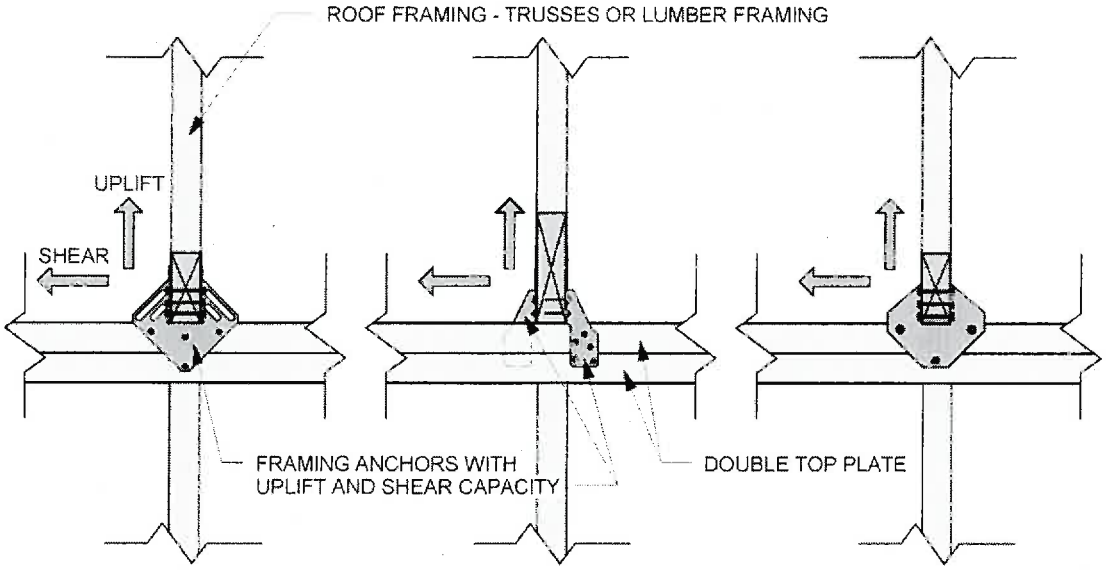

Figure AR402.2.4[b]
Roof Framing to Wall Connection Detail

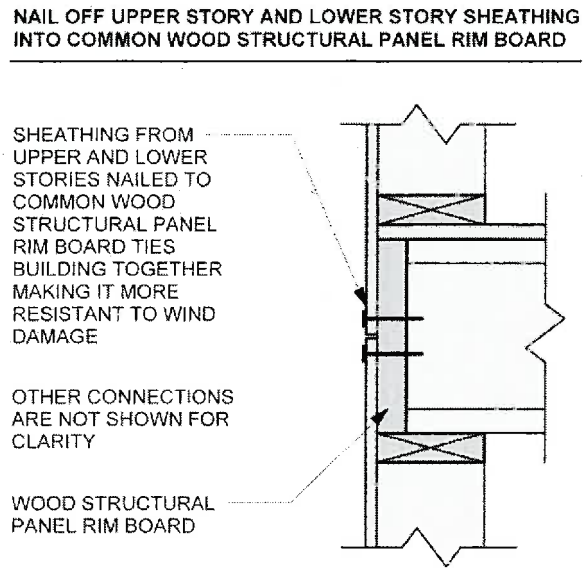

Figure AR402.2.5[b]
Sheathing Attachment at Elevated Floor Level Detail

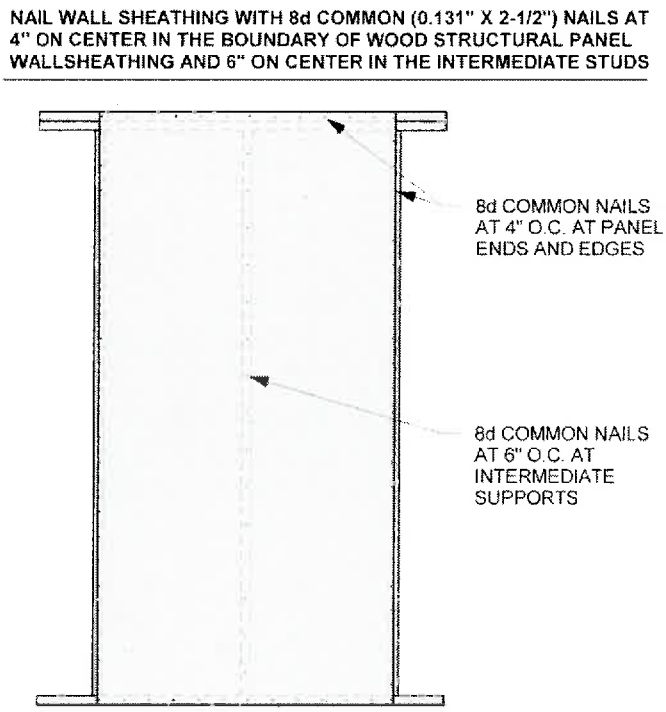

Figure AR402.2.6a[b]
Wall Sheathing Attachment Detail

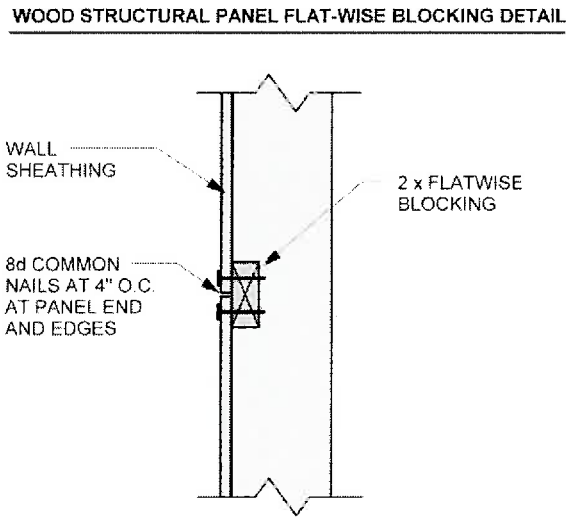

Figure AR402.2.6b
Panel Splice Detail

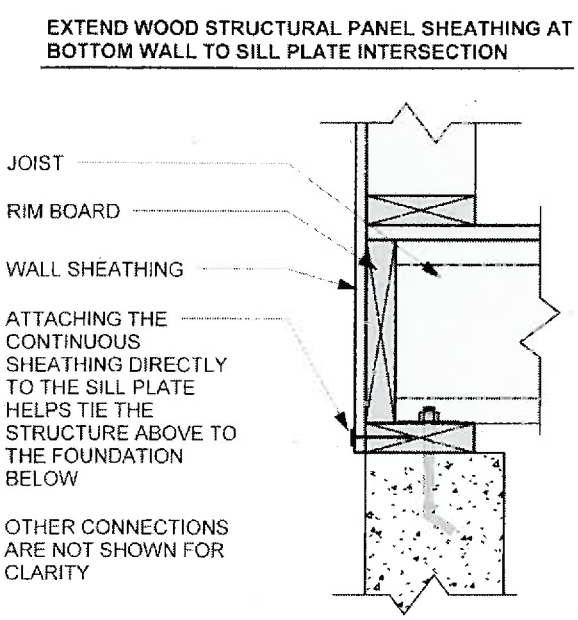

Figure AR402.2.8[b]
Wall Sheathing to Sill Plate Connection Detail

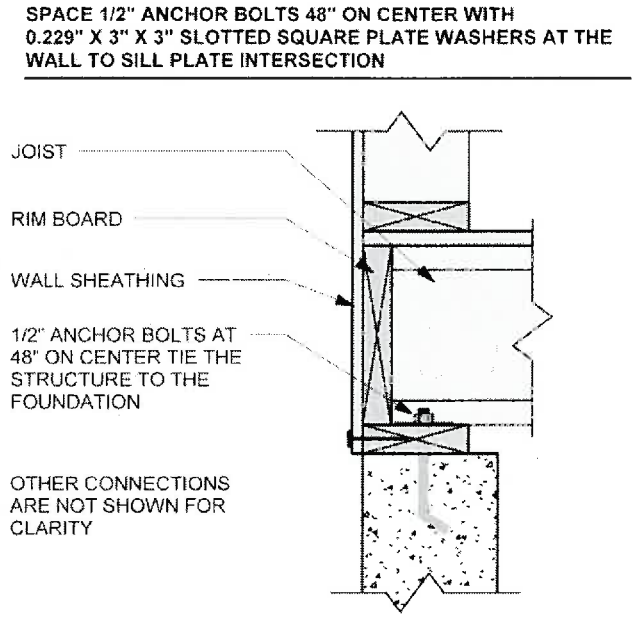

Figure AR402.2.9[b]
Anchor Bolt Connection Detail

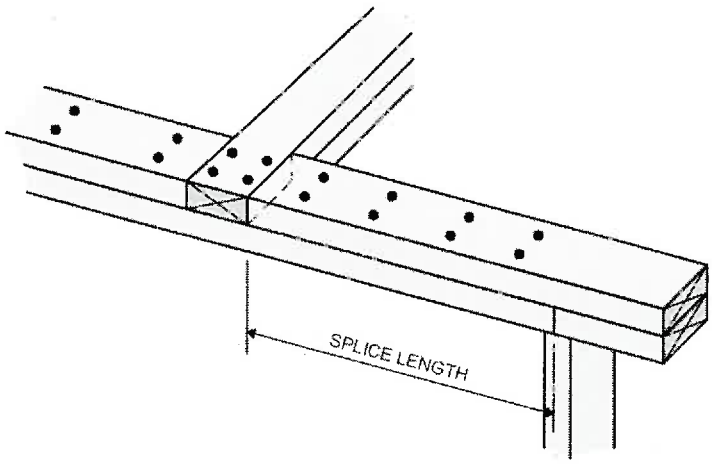

Figure AR402.2.10[c]
Top Plate Intersection Detail

(b) ***Form No. M310B*** **August 2011 APA – The Engineered Wood Association**

(c) ***WFCM Guide to Wood Construction in High Wind Areas for One- and Two-Family*** **Dwellings – American Forest & Paper Association and the American Wood Council**

SECTION AR403
OPTION B –MINIMUM WIND SPEED 110 MPH

AR403.1 Wind speed. *Buildings* shall be designed and constructed to comply with minimum wind speed of 110 mph Exposure B.

AR403.1.1 Design methods. The design of buildings for wind loads shall be in accordance with one or more of the following methods:

1. AF&PA *Wood Frame Construction Manual* (WFCM); or
2. ICC *Standard for Residential Construction in High-Wind Regions* (ICC 600); or
3. ASCE *Minimum Design Loads for Buildings and Other Structures* (ASCE 7); or
4. AISI *Standard for Cold-Formed Steel Framing – Prescriptive Method For One- and Two-Family Dwellings* (AISI S230); or
5. *International Building Code*; or
6. *Concrete walls in accordance with R404 and R611of the International Residential Code*; or
7. *Walls of structural insulated panels in accordance with R613 of the International Residential Code.*

SECTION AR404
OPTION C –MINIMUM WIND SPEED 120 MPH

AR404.1 Wind speed. *Buildings* shall be designed and constructed to comply with minimum wind speed of 120 mph Exposure B.

AR404.1.1 Design methods. The design of buildings for wind loads shall be in accordance with one or more of the following methods:

1. AF&PA *Wood Frame Construction Manual* (WFCM); or
2. ICC *Standard for Residential Construction in High-Wind Regions* (ICC 600); or
3. ASCE *Minimum Design Loads for Buildings and Other Structures* (ASCE 7); or
4. AISI *Standard for Cold-Formed Steel Framing – Prescriptive Method For One- and Two-Family Dwellings* (AISI S230); or
5. *International Building Code; or*
6. *Concrete walls in accordance with R404 and R611of the International Residential Code; or*
7. *Walls of structural insulated panels in accordance with R613 of the International Residential Code.*

SECTION AR405
OPTION D – MINIMUM WIND SPEED 130 MPH

AR405.1 Wind speed. *Buildings* shall be designed and constructed to comply with minimum wind speed of 130 mph Exposure B.

AR405.1.1 Design methods. The design of buildings for wind loads shall be in accordance with one or more of the following methods:

1. AF&PA *Wood Frame Construction Manual* (WFCM); or
2. ICC *Standard for Residential Construction in High-Wind Regions* (ICC 600); or
3. ASCE *Minimum Design Loads for Buildings and Other Structures* (ASCE 7); or
4. AISI *Standard for Cold-Formed Steel Framing – Prescriptive Method For One- and Two-Family Dwellings* (AISI S230); or
5. *International Building Code; or.*
6. *Concrete walls in accordance with R404 and R611of the International Residential Code.*

SECTION AR406
FASTENERS AND CONNECTORS FOR CLADDING

AR406.1 Fasteners and connectors for cladding. Fasteners and connectors to be made of stainless steel, hot-dipped zinc-coated galvanized steel, mechanically deposited-zinc coated, silicon bronze or copper. Copper fasteners shall not be permitted for use in conjunction with steel.

SECTION AR407
FENESTRATION

AR407.1 Design pressure. Exterior windows and doors shall be designed to resist the design wind loads specified in *International Residential Code* Table R301.2(2) adjusted for height and exposure per *International Residential Code* Table R301.2(3) based on the minimum wind speed specified in this appendix by the local jurisdiction.

AR407.2 Anchorage methods. Window and door assembly anchoring systems shall be in accordance with the manufacturer's published recommendations to achieve the design pressure specified per Section AR407.1. Substitute anchoring systems shall provide equal or greater anchoring performance as demonstrated by accepted engineering practice. Anchorage shall not exceed the spacing for the tested rated performance.

SECTION AR408
ROOFING

AR408.1 Secondary water barrier. Underlayment shall be two layers applied in the following manner:

(a) Self-adhering tape as first layer. Install minimum 4 inch wide self-adhering modified bitumen tape over sheathing joints. Seal deck penetrations with self-adhering modified bitumen tape. **ASTM D 226 Type I, ASTM D 4869 Type I or ASTM D 6757** as second layer. Apply a 19-inch strip of underlayment felt parallel to and starting at eaves, secure with low-profile, capped-head nails or thin metal disks attached with roofing nails. Fasten at approximately 6 inches on center along the laps and at approximately 12 inches on center along a row in the field of the sheet between the side laps. All laps shall be a minimum of 4 inches. Starting at the eave, apply 36-inch-wide sheets of underlayment, overlapping successive sheets 19 inches, fasten as before. Distortions in the underlayment shall not interfere with the ability of the shingles to seal.

(b) Two layers of ASTM D 226 Type I, ASTM D 4869 Type I or ASTM D 6757. For each layer, apply a 19-inch strip of underlayment felt parallel to and starting at eaves, secure with low-profile, capped-head nails or thin metal disks attached with roofing nails. Fasten at approximately 6 inches on center along the laps and at approximately 12 inches on center along a row in the field of the sheet between the side laps. All laps shall be a minimum of 4 inches. Starting at the eave, apply 36-inch-wide sheets of underlayment, overlapping successive sheets 19 inches, fasten as before. Distortions in the underlayment shall not interfere with the ability of the shingles to seal.

Exception: As an alternative, adhered underlayment complying with ASTM D 1970 shall be permitted.

AR408.2 Fasteners.

AR408.2.1 Underlayment fasteners. Underlayment shall be attached using metal or plastic cap corrosion-resistant nails with a head diameter of not less than 1 inch with a thickness of at least 32-gauge sheet metal. The cap-nail shank shall be a minimum of 12 gauge with a sufficient length to penetrate through the roof sheathing or a minimum of ¾ inch into the roof sheathing.

AR408.2.2 Asphalt shingles fasteners. Where asphalt shingles shall be applied with corrosion-resistant nails with shanks made of minimum 12 gauge wire and a minimum head diameter of 3/8 inch. Nails shall be long enough to penetrate ¾ inch into the roof deck. Where the deck is less than 3/4 inch thick, the nails shall be long enough to penetrate completely through plywood decking and extend at least 1/8 inch through the roof deck.

AR408.3 Attachment. Where asphalt shingles shall have a minimum number of fasteners required by the manufacturer, but not less than six fasteners per strip shingle or three fasteners per individual shingle. Drive nail head flush with the shingle surface per figure AR408.2.

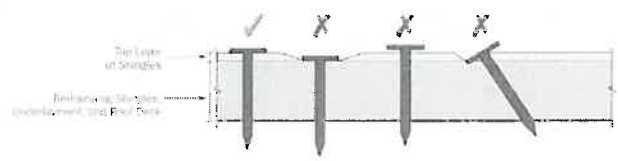

Figure AR408.2[d]

(d) FEMA *Home Builder's Guide to Coastal Construction Technical Fact Sheet No. 7.3 Asphalt Shingle Roofing for High Wind Regions.*

CHAPTER AR5
RESIDENTIAL STORM SHELTERS AND SAFE ROOMS

SECTION AR501
GENERAL

AR501.1 General. This section applies to the construction of residential storm shelters and safe rooms when constructed as separate detached buildings or as internal areas within buildings for the purpose of providing safe refuge for storms that produce high winds, such as tornados and hurricanes. Residential storm shelters or safe rooms shall be offered as an optional package.

SECTION AR502
RESIDENTIAL STORM SHELTERS AND SAFE ROOMS

AR502.1 Residential storm shelters. Residential storm shelters when constructed shall be in compliance with the following:

1. *ICC/NSSA-500* per IRC Section R323.

AR502.2 Residential safe rooms. Residential safe rooms when constructed shall be in compliance with the following:

1. *FEMA 361 Design and Construction Guidance for Community Safe Rooms;* or
2. *FEMA 320 Taking Shelter from the Storm: Building a Safe Room For Your Home and Small Business*

CHAPTER AR6
RESOURCES

SECTION AR601
CONTACTS

Georgia Department of Community Affairs (DCA)
Construction Codes
Georgia State Amendments to the State Minimum Standard Codes
http://www.dca.ga.gov/development/constructioncodes/programs/codeAmendments.asp
Phone: 404-679-3118

Georgia Department of Natural Resources (DNR)
Floodplain Management
4220 International Parkway, Ste. 101
Atlanta, GA 30354-3902
www.georgiadfirm.com
Phone: 404-675-1757

Federal Emergency Management Agency (FEMA)
www.fema.gov; www.floodsmart.gov
www.fema.gov/rebuild/buildingscience/
FEMA Publications and Technical Bulletins:
www.fema.gov/library/index.jsp
www.fema.gov/plan/prevent/floodplain/techbul.shtm

Georgia Emergency Management Agency (GEMA)
Georgia Office of Homeland Security
P.O. Box 18055
Atlanta, GA 30316-0055
www.gema.ga.gov
www.ready.ga.gov
Phone: 404-635-7000

Georgia Association of Regional Commissions (GARC)
www.garc.ga.gov
http://garc.ga.gov/main.php?Regional-Commissions-2
(for assistance in identifying Flood Hazard Areas)

International Code Council (ICC)
www.iccsafe.org

National Weather Service
www.srh.weather.gov

State Fire Marshal's Office
2 Martin Luther King Jr. Drive
Suite 920 / West Tower
Atlanta, Georgia 30334
www.oci.ga.gov
Phone: 404-656-7087

SECTION AR602
EMERGENCY INSPECTION KIT [e]

- ☐ **Staff's disaster response management plan**
- ☐ **Team contact list**
- ☐ **Area maps**
- ☐ **Official identification**
- ☐ **Personal identification**
- ☐ **Inspection forms and placards**
- ☐ **Communication equipment**
- ☐ **Clipboard**
- ☐ **Hard hat**
- ☐ **Orange safety vest**
- ☐ **Dust mask**
- ☐ **Work gloves**
- ☐ **Steel toe and waterproof boots**
- ☐ **Whistle**
- ☐ **First aid kit**
- ☐ **Latex gloves**
- ☐ **Safety glasses**
- ☐ **Sunglasses**
- ☐ **Pocket knife**
- ☐ **Matches**
- ☐ **Antibacterial hand wipes or alcohol-based hand sanitizer**
- ☐ **Insect repellant (w/ Deet or Picaridin)**
- ☐ **Sunscreen (SPF 15 or greater)**
- ☐ **Camera**
- ☐ **Black markers**
- ☐ **Pens & pencils**
- ☐ **Envelope for expense receipts**
- ☐ **Compass, GPS unit**
- ☐ **Backpack, waistpack**
- ☐ **Flashlight and extra batteries**
- ☐ **Battery-operated radio**
- ☐ **Duct tape**
- ☐ **Staples & stapler**
- ☐ **Staple gun**
- ☐ **Calculator**
- ☐ **Tire repair kit**

Remember to grab:

- ☐ **Personal identification**
- ☐ **Rain gear, extra clothing**
- ☐ **Water bottle**
- ☐ **Prescription medication**
- ☐ **Cell phone and charger**
- ☐ **Cash for personal expenses**
- ☐ **Toiletries**

(e) *Disaster Mitigation: A Guide for Building Departments* by the International Code Council, Inc., copyright 2009

SECTION AR603
SAFETY TIPS [a]

1. **Always travel in teams of at least two people.**
2. **Always wear a hard hat, gloves, goggles, safety vest, and dust masks.**
3. **Always wear safety shoes capable of protecting the toes and bottom of the foot.**
4. **Survey the building exterior completely before entering.**
5. **Enter building only if authorized and if deemed safe to do so.**
6. **Be alert for falling objects.**
7. **In case of fire, injuries or victims, evacuate the area and alert the fire department immediately.**
8. **Avoid downed power lines and buildings under them or water surrounding them.**
9. **In case of gas leaks, shut off the gas (if possible) and report the leak.**
10. **In a flood situation, have a "walking stick."**

(a) *When Disaster Strikes* by the International Code Council, Inc., Seventh Printing: November 2011, copyright 2007

SECTION AR604
MAJOR DISASTER PROCESS

(from link http://www.fema.gov/hazard/dproc.shtm)

A Major Disaster Declaration usually follows these steps:

- **Incident occurs and local government responds,** supplemented by neighboring communities and volunteer agencies. If overwhelmed, turn to the state for assistance;

Generally the local government will issue a local state of emergency

- **The State responds** with state resources, such as the National Guard and state agencies;

Prior to committing state resources, the Governor will declare a state of emergency in the counties impacted by the event for which assistance is needed.

- **Damage assessment** by local, state, federal, and volunteer organizations determine losses and recovery needs;

Generally the locals will submit a preliminary damage assessment to the State and the State will review and determine if state and/or federal assistance is needed. If federal assistance is needed, the state will request FEMA perform a preliminary joint damage assessment. If the Governor determines that the incident is of such severity and magnitude that effective response is beyond the capabilities of the State and the affected local governments then supplementary Federal assistance is requested (next step).

- **A Major Disaster Declaration** is requested by the Governor, based on the damage assessment, and agreement to commit state funds and resources to the long-term recovery;
- **FEMA evaluates** the request and recommends action to the White House based on the disaster, the local community and the state's ability to recover;
- **The President approves** the request or FEMA informs the Governor it has been denied. This decision process could take a few hours or several weeks depending on the nature of the disaster.

SECTION AR605
SAMPLE EVALUATION FORMS AND INSPECTION PLACARDS [e] (following pages)

Figure AR605.1 [e]

ATC-45 Rapid Evaluation Safety Assessment Form

Inspection

Inspector ID: _____ Inspection date: _____

Affiliation: _____ Inspection time: _____ ☐ AM ☐ PM

Areas inspected: ☐ Exterior only ☐ Exterior and interior

Building Description

Building name: _____

Address: _____

_____

Building contact/phone: _____

Number of stories: _____

"Footprint area" (square feet): _____

Number of residential units: _____

Type of Building

☐ Mid-rise or high-rise
☐ Low-rise multi-family
☐ Low-rise commercial
☐ Pre-fabricated
☐ One- or two-family dwelling

Primary Occupancy

☐ Dwelling
☐ Other residential
☐ Public assembly
☐ Emergency services
☐ Commercial
☐ Offices
☐ Industrial
☐ Other: _____
☐ Government
☐ Historic
☐ School

Evaluation

Investigate the building for the conditions below and check the appropriate column.

Observed Conditions:	Minor/None	Moderate	Severe
Collapse, partial collapse, or building off foundation	☐	☐	☐
Building significantly out of plumb or in danger	☐	☐	☐
Damage to primary structural members, racking of walls	☐	☐	☐
Falling hazard due to nonstructural damage	☐	☐	☐
Geotechnical hazard, scour, erosion, slope failure, etc.	☐	☐	☐
Electrical lines / fixtures submerged / leaning trees	☐	☐	☐
Other (specify) _____	☐	☐	☐

Estimated Building Damage (excluding contents)

☐ None
☐ >0 to <1%
☐ 1 to <10%
☐ 10 to <30%
☐ 30 to <70%
☐ 70 to <100%
☐ 100%

☐ See back of form for further comments.

Posting

Choose a posting based on the evaluation and team judgment. Severe conditions endangering the overall building are grounds for an Unsafe posting. Localized Severe and overall Moderate conditions may allow a Restricted Use posting.

☐ **INSPECTED** (Green placard) ☐ **RESTRICTED USE** (Yellow placard) ☐ **UNSAFE** (Red placard)

Record any use and entry restrictions exactly as written on placard: _____

_____

_____

Number of residential units vacated: _____

Further Actions

Check the boxes below only if further actions are needed.

☐ Barricades needed in the following areas: _____

_____

☐ Detailed Evaluation recommended: ☐ Structural ☐ Geotechnical ☐ Other: _____

☐ Substantial Damage determination recommended

☐ Other recommendations: _____

_____

☐ See back of form for further comments.

© Copyright 2004-07, Applied Technology Council.
Permission is granted for unlimited, non-exclusive, non-commercial use and distribution of ATC evaluation forms, provided that this Copyright Notice appears on all copies and the Applied Technology Council name shall not be used in any advertising or publicity of Licensee product. Permission is further subject to the following conditions: (1) Licensee does not reprint, repackage or offer this form for sale or license; and (2) no material gain or financial profit is to be made from any sale or license of this form. Placards may be used without restrictions for their intended use as building postings. All rights not specifically granted to Licensee are herein reserved by ATC.

Figure AR605.2 [e]

ATC-45 Detailed Evaluation Safety Assessment Form

Inspection

Inspector ID: _____ Inspection date: _____

Affiliation: _____ Inspection time: _____ ☐ AM ☐ PM

Final Posting
from page 2

☐ Inspected
☐ Restricted Use
☐ Unsafe

Building Description

Building name: _____

Address: _____

_____

Building contact/phone: _____

Number of stories: _____

"Footprint area" (square feet): _____

Number of residential units: _____

Type of Building

☐ Mid-rise or High-rise
☐ Low-rise multi-family
☐ Low-rise commercial
☐ Pre-fabricated
☐ One- or two-family dwelling
☐ Other: _____

Primary Occupancy

☐ Dwelling
☐ Other residential
☐ Public assembly
☐ Emergency services
☐ Commercial
☐ Offices
☐ Industrial
☐ Other: _____
☐ Government
☐ Historic
☐ School

Evaluation

Investigate the building for the conditions below and check the appropriate column. There is room on the second page for a sketch.

	Minor/None	Moderate	Severe	Comments
Overall hazards:				
Collapse or partial collapse	☐	☐	☐	
Building or story lean or drift	☐	☐	☐	
Fractured or displaced foundation	☐	☐	☐	
Structural hazards:				
Failure of significant element/connection	☐	☐	☐	
Column, pier, or bearing wall	☐	☐	☐	
Roof/floor framing or connection	☐	☐	☐	
Superstructure/foundation connection	☐	☐	☐	
Moment frame	☐	☐	☐	
Diaphragm/horizontal bracing	☐	☐	☐	
Vertical bracing	☐	☐	☐	
Shear wall	☐	☐	☐	
Nonstructural hazards:				
Parapets, ornamentation	☐	☐	☐	
Canopy	☐	☐	☐	
Cladding, glazing	☐	☐	☐	
Ceilings, light fixtures	☐	☐	☐	
Stairs, exits, access walkways, gratings	☐	☐	☐	
Interior walls, partitions	☐	☐	☐	
Mechanical & electrical equipment	☐	☐	☐	
Elevators	☐	☐	☐	
Building contents, other _____	☐	☐	☐	
Geotechnical hazards:				
Slope failure, debris impact	☐	☐	☐	
Ground movement, erosion, sedimentation	☐	☐	☐	
Differential settlement	☐	☐	☐	

Continue on page 2

Figure AR605.2 [c] (Continued)

ATC-45 Detailed Evaluation Safety Assessment Form — Page 2

Building name: _____ Inspector ID: _____

Sketch
Make a sketch of the damaged building in the space provided. Indicate damage points.

Estimated Building Damage
(excluding contents)

- ☐ None
- ☐ >0 to <1%
- ☐ 1 to <10%
- ☐ 10 to <30%
- ☐ 30 to <70%
- ☐ 70 to <100%
- ☐ 100%

Posting
If there is an existing posting from a previous evaluation, check the appropriate box.

Previous posting: ☐ INSPECTED ☐ RESTRICTED USE ☐ UNSAFE Inspector ID: _____ Date: _____

If necessary, revise the posting based on the new evaluation and team judgment. *Severe* conditions endangering the overall building are grounds for an Unsafe posting. Local *Severe* and overall *Moderate* conditions may allow a Restricted Use posting. Indicate the current posting below and at the top of page one, whether the posting has been revised or not.

☐ **INSPECTED** (Green placard) ☐ **RESTRICTED USE** (Yellow placard) ☐ **UNSAFE** (Red placard)

Record any use and entry restrictions exactly as written on placard: _____

Number of residential units vacated: _____

Further Actions Check the boxes below only if further actions are needed.

☐ Barricades needed in the following areas: _____

☐ Engineering Evaluation recommended: ☐ Structural ☐ Geotechnical ☐ Other _____

☐ Substantial Damage determination recommended

☐ Other recommendations: _____

© Copyright 2004-07, Applied Technology Council.
Permission is granted for unlimited, non-exclusive, non-commercial use and distribution of ATC evaluation forms, provided that this Copyright Notice appears on all copies and the Applied Technology Council name shall not be used in any advertising or publicity of Licensee product. Permission is further subject to the following conditions: (1) Licensee does not reprint, repackage or offer this form for sale or license; and (2) no material gain or financial profit is to be made from any sale or license of this form. Placards may be used without restrictions for their intended use as building postings. All rights not specifically granted to Licensee are herein reserved by ATC.

INSPECTED

LAWFUL OCCUPANCY PERMITTED

This structure has been inspected (as indicated below) and no apparent structural hazard has been found.

☐ **Inspected Exterior Only**

☐ **Inspected Exterior and Interior**

Report any unsafe condition to local authorities; reinspection may be required.

Inspector Comments:

_____

_____

_____

_____

Facility Name and Address:

_____

_____

_____

Date _____

Time _____

This facility was inspected under emergency conditions for:

_____

(Jurisdiction)

Inspector ID / Agency

_____

_____

_____

Do Not Remove, Alter, or Cover this Placard until Authorized by Governing Authority

Figure AR605.3 e

RESTRICTED USE

Caution: This structure has been inspected and found to be damaged as described below:

_____

_____

_____

_____

Entry, occupancy, and lawful use are restricted as indicated below:

☐ Do not enter the following areas: _____

_____

☐ Brief entry allowed for access to contents: _____

_____

☐ Other restrictions: _____

_____

Facility name and address:

_____

_____

_____

Date _____

Time _____

This facility was inspected under emergency conditions for:

_____

(Jurisdiction)

Inspector ID / Agency

_____

_____

_____

Do Not Remove, Alter, or Cover this Placard until Authorized by Governing Authority

Figure AR605.4 [e]

UNSAFE

DO NOT ENTER OR OCCUPY
(THIS PLACARD IS NOT A DEMOLITION ORDER)

This structure has been inspected, found to be seriously damaged and is unsafe to occupy, as described below:

_____
_____
_____
_____
_____
_____

Do not enter, except as specifically authorized in writing by jurisdiction. Entry may result in death or injury.

Facility Name and Address:

_____
_____
_____

Date _____

Time _____

This facility was inspected under emergency conditions for:

_____
(Jurisdiction)

Inspector ID / Agency

_____
_____
_____

Do Not Remove, Alter, or Cover this Placard until Authorized by Governing Authority

Figure AR605.5 [e]

CHAPTER AR7
REFERENCES

REFERENCED STANDARDS

ASCE Standards ASCE/SEI 24-05 Flood Resistant Design and Construction
FEMA P-320, Third Edition / August 2008 Taking Shelter From the Storm: Building a Safe Room For Your Home or Small Business, Includes Construction Plans and Cost Estimates
FEMA 361, Second Edition / August 2008 Design and Construction Guidance for Community Safe Rooms
FEMA Technical Bulletin 2, Table 2. Types, Uses, and Classifications of Materials

REFERENCED RESOURCES

(a) *When Disaster Strikes* by the International Code Council, Inc., Seventh Printing: November 2011, copyright 2007
(b) *Form No. M310B* August 2011 APA – The Engineered Wood Association; www.apawood.org
(c) *WFCM Guide to Wood Construction in High Wind Areas for One- and Two-Family* Dwellings – American Forest & Paper Association and the American Wood Council; www.awc.org
(d) FEMA *Home Builder's Guide to Coastal Construction Technical Fact Sheet No. 7.3 Asphalt Shingle Roofing for High Wind Regions.*
(e) *Disaster Mitigation: A Guide for Building Departments* by the International Code Council, Inc., copyright 2009

Index of Figures:

Figure AR103.3 **Post Disaster Building Safety Evaluation Chart [a]** **10**
Figure AR402.2 **Prescriptive wood frame construction method deemed to comply with 100 mph** **14**
Figure AR402.2.1 **Roof Sheathing Attachment Detail** **15**
Figure AR402.2.2 **Gable End Wall Connection Detail** **15**
Figure AR402.2.3 **Gable End Wall Sheathing Detail** **16**
Figure AR402.2.4 **Roof Framing to Wall Connection Detail** **16**
Figure AR402.2.5 **Sheathing Attachment at Elevated Floor Level Detail** **17**
Figure AR402.2.6a **Wall Sheathing Attachment Detail** **17**
Figure AR402.2.6b **Panel Splice Detail** **17**
Figure AR402.2.8 **Wall Sheathing to Sill Plate Connection Detail** **18**
Figure AR402.2.9 **Anchor Bolt Connection Detail** **18**
Figure AR402.2.10 **Top Plate Intersection Detail** **18**
Figure AR408.2 **Roof Shingle Nailing Detail** **20**
Figure AR605.1 **ATC-45 Rapid Evaluation Form** **24**
Figure AR605.2 **ATC-45 Detail Evaluation Form** **25**
Figure AR605.3 **Inspected Placard** **27**
Figure AR605.4 **Restricted Placard** **28**
Figure AR605.5 **Unsafe Placard** **29**

Georgia State
International Building Code

Appendix N
Disaster Resilient Construction
(2012 Edition)

Georgia Department of Community Affairs
Local Government Assistance Division
60 Executive Park South, N.E.
Atlanta, Georgia 30329-2231
(404) 679-3118
www.dca.ga.gov

January 1, 2013

APPENDIX N
DISASTER RESILIENT CONSTRUCTION

CHAPTER AN1
SCOPE AND ADMINISTRATION

SECTION AN101
ADMINISTRATION

AN101.1 Purpose. The scope of this appendix is to promote enhanced public health, safety and general welfare and to reduce public and private property losses due to hazards and natural disasters associated with flooding, high-winds, and windborne debris above that which is provided in the general provisions of this appendix.

AN101.2 Objectives. The objectives of this appendix are to:

1. Protect human life, to minimize property loss and to minimize the expenditures of public money associated with natural weather related disasters, including flooding, tornadoes and other high-wind events.
2. Establish enhanced design and construction regulations consistent with nationally recognized good practices for the safeguarding of life and property.

AN101.3 Scope.

AN101.3.1 The provisions of this appendix are not mandatory unless specifically referenced in an adopting ordinance of **[NAME OF JURISDICTION]**. If adopted, the provisions shall apply to all new development and to substantial improvements to existing development.

AN101.3.2 The provisions of this appendix supplement the jurisdiction's building and fire codes to provide for enhanced provisions to mitigate the hazard to life and property from natural weather related disasters, including flooding, tornadoes and other high-wind events.

AN101.3.3 The provisions of this appendix establish design and construction standards for storm shelters.

AN101.4 Violations. Any violation of a provision of this appendix or failure to comply with a permit of variance issued pursuant to this appendix or any requirement of this appendix shall be handled in accordance with the ordinances of **[NAME OF JURISDICTION]**.

SECTION AN102
APPLICABILITY

AN102.1 General. This appendix provides enhanced minimum requirements for development of new construction and substantial improvement of existing development above that contained in the *International Building Code (IBC)*.

AN102.1.1 The provisions of this appendix shall apply to all new construction and additions, and shall apply to substantial alterations in flood hazard areas unless it is technically infeasible or otherwise exempted in Section 3403.2 of the *International Building Code*.

AN102.1.2 Regardless of the category of work being performed, the work shall not cause the structure to become unsafe or adversely affect the performance of the building; shall not cause an existing mechanical or plumbing system to become unsafe, hazardous, insanitary or overloaded; and unless expressly permitted by these provisions, shall not make the building any less compliant with this appendix or to any previously approved alternative arrangements than it was before the work was undertaken.

AN102.1.3 Where there is a conflict between a requirement of the *International Building Code* and a requirement of this appendix, the requirement of this appendix shall govern. Where there is a conflict between a general requirement of this appendix and a specific requirement of this appendix, the specific requirement shall govern. Where, in any specific case, different sections of this appendix specify different materials, methods of construction or other requirements, the most restrictive shall govern.

AN102.2 Other laws. The provisions of this appendix shall not be deemed to nullify any provisions of local, state or federal law.

AN102.3 Referenced codes and standards. The codes and standards referenced in this appendix shall be those that are listed in Chapter AN7 and such codes and standards shall be considered as part of the requirements of this appendix to the prescribed extent of each such reference. Where differences occur between provisions

this appendix and referenced codes and standards, the provisions of this appendix shall apply.

SECTION AN103
POST DISASTER EVENT INSPECTIONS GUIDELINES

AN103.1 Inspections. The building official or agents shall inspect buildings and structures to determine the habitability of each with the goal of getting the community back into their residences quickly and safely. Inspections shall always be performed by teams of at least two individuals, also known as disaster assessment teams.

AN103.1.1 Right of entry. Unless permitted under the exigent circumstances provisions or from an order from State or Federal Authorities, disaster assessment teams shall confirm the right of entry requirements with the incident commander. Upon approval, the assessment teams shall be authorized to enter the structure or premises at reasonable times to inspect or perform duties as provided by this code, provided that the structure or premises be occupied, that credentials are presented, that entry is requested, and that entry is granted by the owner or person having charge over the structure or premises.

AN103.2 Types of inspections.

AN103.2.1 Rapid evaluation. Rapid evaluation is performed after a disaster event to determine if a building is apparently safe or obviously unsafe. The evaluation should last 10 to 30 minutes per building and shall be performed by the building official and/or their designated responders. Evaluation shall determine if a detailed evaluation is necessary. Placards are posted on buildings indicating status as one of the following:

1. INSPECTED
2. RESTRICTED USE
3. UNSAFE

See Section AN605 for Placards that may be reproduced for use in the field during evaluations. The jurisdiction shall alter placards to meet the jurisdiction and building department's requirements.

AN103.2.2 Detailed evaluation. Detailed evaluation is a thorough visual examination of a damaged building performed by a team of two, including an inspector and a design professional. Evaluation should last 30 minutes to 4 hours per building. Evaluation shall determine necessary restrictions on a damaged building's use, the need for an engineering evaluation or to evaluate postings.

AN103.2.3 Engineering evaluation. When indicated by the building official as necessary, engineering evaluations shall be completed by a registered design professional hired by the building owner.

AN103.3 Post disaster building safety evaluation chart. See Figure AN103.3 for Post Disaster Building Safety Evaluation Chart.

AN103.4 Evaluation Forms. *ATC-45 Rapid Evaluation Safety Assessment Form* and *ATC-45 Detailed Evaluation Safety Assessment Form* shall be used by **[Name of Jurisdiction]'s** Building Official for post disaster inspections. See Section AN605 for copies of the Safety Assessment Forms.

AN103.5 Placement and removal of placards.

AN103.5.1 Placement. Placards are to be posted in a clearly visible location near the main entrance and shall be visible from the public right-of-way. RESTRICTED USE or UNSAFE placards shall be placed at all entrances.

AN103.5.2 Removal. Placards shall not be removed or replaced, except by the authorized representatives of the local jurisdiction.

Figure AN103.3 Post Disaster Building Safety Evaluation Chart [a]

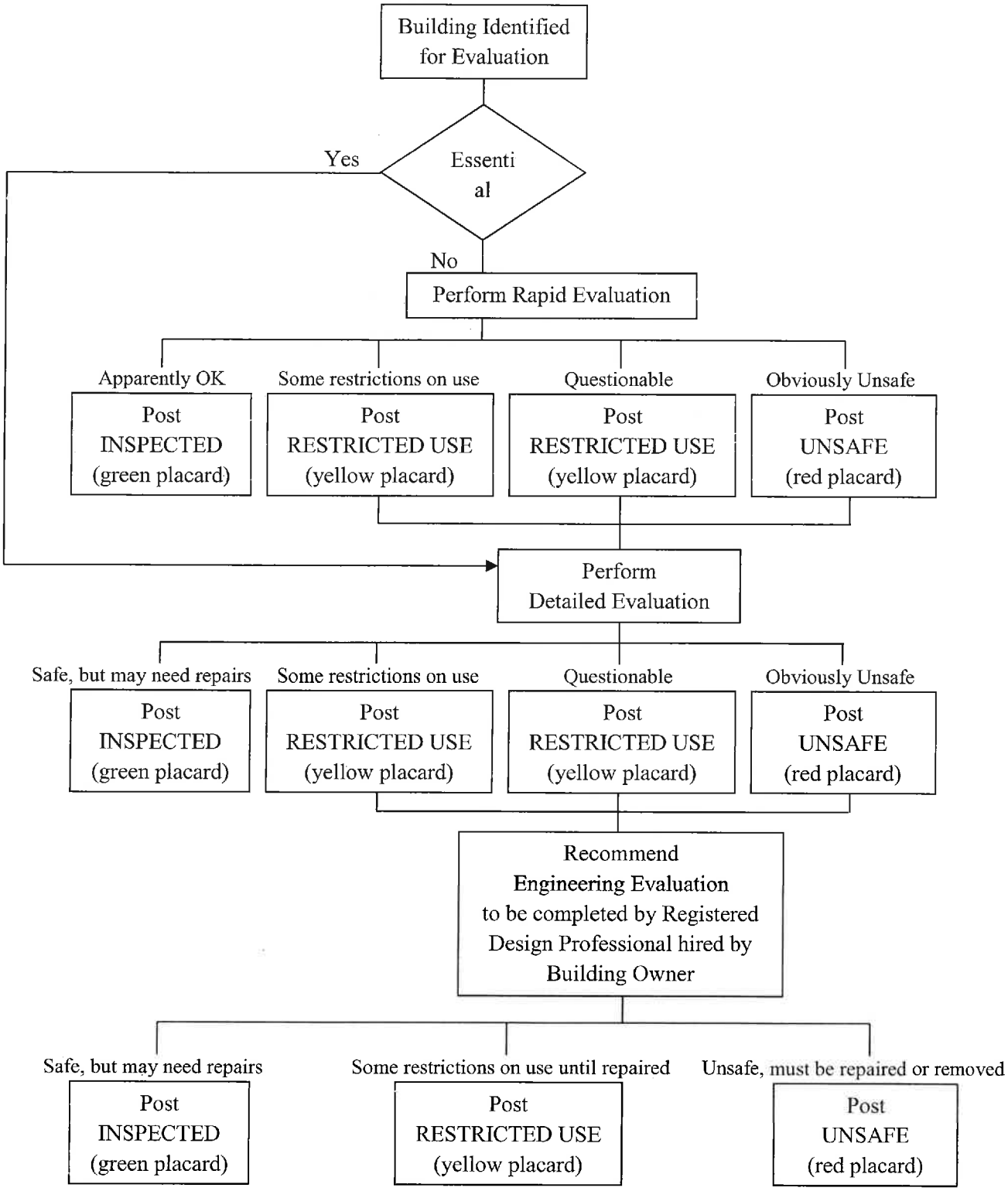

[a] *When Disaster Strikes* by the International Code Council, Inc., Seventh Printing: November 2011, copyright 2007

CHAPTER AN2
DEFINITIONS

SECTION AN201
GENERAL

AN201.1 Scope. Unless otherwise expressly stated the following words and terms shall, for the purposes of this appendix, have the meanings shown in this chapter.

AN201.2 Terms defined in other codes. Where terms are not defined in this appendix and are defined in other *International Codes*, such terms shall have the meanings ascribed to them as in those codes.

AN201.3 Terms not defined. Where terms are not defined through the methods authorized by this section, such terms shall have their ordinarily accepted meanings such as the context implies.

SECTION AN202
DEFINITIONS

500-YEAR FLOOD. Flood having a 0.2% annual probability of being equaled or exceeded.

ADVISORY BASE FLOOD ELEVATION (ABFE). An advisory base flood elevation (BFE) issued by the Federal Emergency Management Agency (FEMA) that reflects post-storm conditions and vulnerability to damages from future flooding.

BASE FLOOD. Flood having a 1% chance of being equaled or exceeded in any given year, also referred to as the 100-year flood.

BASE FLOOD ELEVATION (BFE). The elevation of flooding, including wave height, having a 1% chance of being equaled or exceeded in any given year established relative to the National Geodetic Vertical Datum (NGVD), North American Vertical Datum (NAVD) or other datum specified on the *Flood Insurance Rate Map* (FIRM).

BUILDING OFFICIAL. The officer or other designated authority charged with the administration and enforcement of the *International Building Code*, or the building official's duly authorized representative.

DESIGN FLOOD. The greater of the following two flood events:

(1) The *base flood*, affecting those areas identified as *special flood hazard areas* on the community's FIRM;

(2) The flood corresponding to the area designated as a *flood hazard area* on a community's *flood hazard map* or otherwise legally designated.

DESIGN FLOOD ELEVATION (DFE). The elevation of the *design flood*, including wave height, relative to the datum specified on the community's legally designated flood hazard map. In areas designated as Zone AO, the *design flood elevation* shall be the elevation of the highest existing grade of the building's perimeter plus the depth number (in feet) specified on the flood hazard map.

FLOOD [DAMAGE]-RESISTANT MATERIAL. Any building product [material, component or system] capable of withstanding direct and prolonged contact with floodwaters without sustaining significant damage.

FLOOD HAZARD AREA. The area subject to flooding during the *design flood.*

FLOOD HAZARD MAP. Map delineating *flood hazard areas* adopted by the authority having jurisdiction.

FLOOD INSURANCE RATE MAP (FIRM). An official map of a community on which the Federal Emergency Management Agency (FEMA) has delineated both the *special flood hazard areas* and the risk premium zones applicable to the community.

FREEBOARD. A factor of safety expressed in feet above a flood level for purposes of floodplain management.

FUTURE-CONDITIONS FLOOD. The flood having a 1% chance of being equaled or exceeded in any given year based on future-conditions hydrology. Also known as the 100-year future-conditions flood.

FUTURE-CONDITIONS FLOOD ELEVATION. The flood standard equal to or higher than the Base Flood Elevation. The future-conditions flood elevation is defined as the highest water surface anticipated at any given point during the future-conditions flood.

CHAPTER AN3
FLOOD-RESISTANT CONSTRUCTION

Forward: This appendix provides three different options for increased freeboard. The jurisdiction may pick only one option that is higher than previously adopted and enforced by the jurisdiction. The National Flood Insurance Program (NFIP) minimum standards reference Base Flood Elevation without any freeboard in high risk flood hazard areas. Due to the flood damage prevention updates performed during the Map Modernization initiative that led to flood risks being digitally identified in all 159 Georgia counties, all Georgia NFIP participating communities have freeboard standards that meet or exceed the 1 foot standard used in the State model ordinances for areas where BFEs have been established.

SECTION AN301
HAZARD IDENTIFICATION

AN301.1 Identification of flood hazard areas. To establish flood hazard areas:

(a) flood hazard map adopted by jurisdiction based on areas of special flood hazard as identified by the Federal Emergency Management Agency in an engineering report entitled "The Flood Insurance Study of **[INSERT NAME OF JURISDICTION]**," dated **[INSERT DATE ISSUANCE]**, and amended or revised with the accompanying Flood Insurance Rate Map (FIRM) and Flood Boundary and Floodway Map (FBFM) and related supporting data along with any revisions thereto.

(b) FIRM maps provided by the Federal Emergency Management Agency.

SECTION AN302
SCOPE

AN302.1 Flood loads. Buildings designed and constructed in flood hazard areas defined in IBC Section 1612.2 shall comply with the following:

AN302.1.1 Flood hazard areas without base flood elevations. In flood hazard areas without base flood or future-conditions flood elevation data, new construction and substantial improvements of existing structures shall have the lowest floor of the lowest enclosed area (including basement) elevated no less than three (3) feet above the highest adjacent grade to the building foundation.

OPTION A – FLOOD ELEVATION

AN302.1.2 Increase to base flood elevation requirements. Floors required by ASCE 24 to be built above base flood elevations as follows:

The higher of:

(a) Design flood elevation plus one (1) foot, or
(b) Base flood elevation plus one (1) foot, or
(c) Advisory base flood elevation, or
(d) Future-conditions plus one (1) foot, if known or
(e) 500-year flood, if known

OPTION B– FLOOD ELEVATION

AN302.1.3 Increase to base flood elevation requirements. Floors required by ASCE 24 to be built above base flood elevations as follows:

The higher of:

(a) Design flood elevation plus two (2) feet, or
(b) Base flood elevation plus two (2) feet, or
(c) Advisory base flood elevation, or
(d) Future-conditions plus one (1) foot, if known or
(e) 500-year flood, if known

OPTION C – FLOOD ELEVATION

AN302.1.4 Increase to base flood elevation requirements. Floors required by ASCE 24 to be built above base flood elevations as follows:

The higher of:

(a) Design flood elevation plus three (3) feet, or
(b) Base flood elevation plus three (3) feet, or
(c) Advisory base flood elevation, or
(d) Future-conditions plus one (1) foot, if known or
(e) 500-year flood, if known

SECTION AN303
FLOOD DAMAGE-RESISTANT MATERIALS

AN303.1 Flood damage-resistant materials. Flood damage-resistant materials comply with FEMA Technical Bulletin 2, Table 2. Types, Uses, and Classifications of Materials.

AN303.2 Location of flood damage-resistant materials. Building components and materials located below the increase to base flood elevation as determined by the local jurisdiction in accordance with AN302.1 shall be flood damage-resistant as defined by Section AN303.1.

AN303.3 Fasteners and connectors used for flood damage-resistant materials. Fasteners and connectors used for flood damage-resistant materials to be made of stainless steel, hot-dipped zinc-coated galvanized steel, mechanically deposited-zinc coated, silicon bronze or copper. Copper fasteners shall not be permitted for use in conjunction with steel.

CHAPTER AN4
HIGH-WIND RESISTIVE CONSTRUCTION

SECTION AN401
GENERAL

AN401.1 Applications. Buildings, and parts thereof shall be designed to withstand the minimum wind loads and meet the opening protection requirements of IBC Section 1609 as modified in this chapter. **Wind Load Option A, B or C shall be selected. Table AN401.1 may be used to assist in the selection of an appropriate Wind Load Option.**

AN401.2 Limitations. The following limitations shall apply to the design and construction of buildings with respect to winds.

AN401.2.1 Empirical masonry. The empirical masonry provisions in IBC Section 2109 or Chapter 5 of TMS 402/ACI 530/ASCE 5 shall not be permitted to be used for the wind load resisting elements of buildings, or parts of buildings or other structures.

AN401.2.2 Unreinforced (plain) masonry. The unreinforced masonry provisions in IBC Section 2109 or sections 2.2, 3.2 or 8.2 of TMS 402/ACI 530/ASCE 5 shall not be permitted to be used for the wind load resisting elements of buildings, or parts of buildings or other structures.

AN401.2.3 Conventional light-frame construction. The *conventional light-frame constriction* provisions in IBC Section 2308 shall not be permitted to be used for the wind load resisting elements of buildings, or parts of buildings or other structures.

Exception: Compliance with AF&PA WFCM shall be permitted subject to the limitations therein and the limitations of this appendix.

SECTION AN402
DEFINITIONS AND NOTATIONS

AN402.1 General. The following terms are defined in Chapter 2 of the International Building Code:

CONVENTIONAL LIGHT-FRAME CONSTRUCTION.

MASONRY.

Unreinforced (plain) masonry.

WIND-BORNE DEBRIS REGION.

WIND SPEED, V_{ult}.

SECTION AN403
WIND LOADS

AN403.1 Wind Directionality Factor. The directionality factor for Wind Option B and C shall be taken as 1.0.

AN403.2 Exposure. Wind pressures for Wind Option B and C shall be based on exposure category C or D in accordance with IBC Section1609.4 or ASCE 7.

AN403.3 Enclosure classification. The enclosure classification shall be determined in accordance with ASCE 7 with the largest door or window on a wall that receives positive external pressure considered as an opening.

AN403.4 Continuous operation of Risk Category IV buildings. When a building or an internal area within a building in Risk Category IV is required to remain operational during a design wind event (target performance level OB), that building or that internal area shall be designed in accordance with ICC-500 or FEMA-361.

SECTION AN404
WIND LOAD OPTION A

AN404.1 Basic wind speed. The ultimate design wind speed, V_{ult}, for use in the design of buildings and structures shall be obtained from IBC Section 1609.3.

AN404.2 Debris Hazard and Protection of Openings. Buildings shall be designed for impact resistance in accordance with IBC Section 1609.1.2 or ASCE 7.

Exception:

1. For Risk Category III buildings with a Life Safety target performance level for the entire building, the exterior glazing shall be impact resistant or be protected with an impact resistant covering meeting the requirements of ASTM E1996.
2. For Risk Category IV buildings with an Immediate Occupancy target performance level for the entire building, the exterior glazing shall be impact resistant or be protected with an impact resistant covering meeting the requirements of ASTM E1996 for *Enhanced Protection.*

SECTION AN405
WIND LOAD OPTION B

AN405.1 Basic wind speed. The ultimate design wind speed, V_{ult}, for use in the design of Risk Category I buildings and structures shall be obtained from IBC Section 1609.3. The ultimate design wind speed, V_{ult}, for use in the design of Risk Category II buildings and structures shall be obtained from IBC Figure 1609B. The ultimate design wind speed, V_{ult}, for use in the design of Risk Category III and IV buildings and structures shall be obtained from IBC Figure 1609B or 135 mph, whichever is greater.

AN405.2 Debris Hazard and Protection of Openings. Buildings shall be designed for impact resistance in accordance with this Section in addition to IBC Section 1609.1.2 or ASCE 7.

Exception:

1. For Risk Category IV buildings, all components of the exterior envelope shall be impact resistant or be protected with an impact resistant covering meeting the requirements of ASTM E1996 for *Enhanced Protection.*

SECTION AN406
WIND LOAD OPTION C

AN406.1 Basic wind speed. The ultimate design wind speed, V_{ult}, for use in the design of Risk Category I buildings and structures shall be obtained from IBC Section 1609.3. The ultimate design wind speed, V_{ult}, for use in the design of Risk Category II buildings and structures shall be obtained from IBC Figure 1609B. The ultimate design wind speed, V_{ult}, for use in the design of Risk Category III and IV buildings and structures shall be obtained from IBC Figure 1609B or 170 mph, whichever is greater.

AN406.2 Debris Hazard and Protection of Openings. Buildings shall be designed for impact resistance in accordance with this Section in addition to IBC Section 1609.1.2 or ASCE 7.

Exception:

1. For Risk Category IV buildings, all components of the exterior envelope shall be impact resistant or be protected with an impact resistant covering meeting the requirements of ASTM E1996 for *Enhanced Protection.*

Table AN401.1
WIND LOAD OPTIONS:
TARGET PERFORMANCE LEVELS AND DESIGN CRITERIA[4]

OPTION	DESIGN WIND EVENT	Risk Category II[1]			Risk Category III[1]			Risk Category IV[1]		
		Target Performance Level[2]	Min Wind Speed V_{ult}	Wind-Borne Debris	Target Perfor-mance Level[2]	Min Wind Speed V_{ult}	Wind-Borne Debris	Target Perfor-mance Level[2]	Min Wind Speed V_{ult}	Wind-Borne Debris
A	EF0 & 1 Tornado – IBC level Hurricane	CP[3]	IBC 1609.3	IBC 1609.1.2 or ASCE 7	CP[3]	IBC 1609.3	IBC 1609.1.2 or ASCE 7	CP[3]	IBC 1609.3	IBC 1609.1.2 or ASCE 7
					LS		Glazing	IO[5]		Glazing
B	EF2 Tornado – Cat 3 Hurricane	CP[3] for EF0-EF1-IBC Hurricane for Risk Cat. III/IV	IBC 1609.3 for Risk Cat. III/IV	IBC 1609.1.2 or ASCE 7	LS	145 mph	Req'd for glazing per IBC 1609.1.2 and ASCE 7	IO[5]	145 mph	Exterior Envelope
C	EF3 Tornado – Cat 4 Hurricane	CP[3] for EF0-EF1-IBC Hurricane for Risk Cat. III/IV	IBC 1609.3 for Risk Cat. III/IV	IBC 1609.1.2 or ASCE 7	LS	170 mph	Req'd for glazing per IBC 1609.1.2 and ASCE 7	IO[5]	170 mph	Exterior Envelope

Notes:

1. Risk Category per IBC Section 1604.5
2. Performance Levels:
   - CP: Collapse Prevention
   - LS: Life Safety
   - IO: Immediate Occupancy
   - OB: Operational Building
3. LS for occupants away from exterior envelope. IO for storm shelters or safe rooms.
4. See Section AN401 and Section AN403 for additional limitations and criteria.
5. OB for building or an internal area within a building designed to ICC-500 or FEMA 361.

CHAPTER AN5
STORM SHELTERS, SAFE ROOMS AND BEST AVAILABLE REFUGE AREAS

SECTION AN501
GENERAL

AN501.1 General. This section applies to the location and construction of storm shelters and safe rooms when constructed as separate detached buildings or as internal areas within buildings for the purpose of providing safe refuge for storms that produce high winds, such as tornados and hurricanes, and to the selection of best available refuge areas. Storm shelters shall be designed and constructed in accordance with IBC Section 423. Safe rooms shall be designed and constructed in accordance with FEMA 361. Storm shelters, safe rooms, and best available refuge areas shall be located on an accessible route.

Exception: *Residential Safe Rooms* and safe rooms serving a Business Group B Occupancy and having an *occupant load* not exceeding 16 persons may be constructed in accordance with FEMA 320.

AN501.2 Occupant load. The occupant load for storm shelters and safe rooms shall be determined by ICC 500 and FEMA 361 respectively.

AN501.3 Construction documents. Construction documents for buildings containing a storm shelter or safe room shall include the information required in ICC 500 or FEMA 361 respectively. Construction documents for buildings with access to a remote community storm shelter or safe room shall indicate the location of and access to the community storm shelter or safe room. Construction documents for buildings not containing or without access to a remote storm shelter or safe room, shall indicate the best available refuge area.

AN501.4 Signage. The location(s) of storm shelters, safe rooms or the best available refuge area(s) shall be clearly marked with a permanent sign.

SECTION AN502
DEFINITIONS AND NOTATIONS

AN502.1 Definitions. The following terms are defined in Chapter 2 of the International Building Code:

DWELLING UNITS.
OCCUPANT LOAD.
STORM SHELTER.
Community Storm Shelter.
Residential Storm Shelter.

AN502.2 Additional definitions.

BEST AVAILABLE REFUGE AREAS. Areas in a building that have been deemed by a registered design professional to likely offer the greatest safety for building occupants during a tornado or hurricane. Because these areas were not specifically designed as storm shelters or safe rooms, their occupants may be injured or killed during a tornado or hurricane. However, people in the best available refuge areas are less likely to be injured or killed than people in other areas of a building.

SAFE ROOM. A building, structure or portions thereof, constructed in accordance with FEMA 361 and designed for use during a severe wind storm event, such as a hurricane or tornado.

Community Safe Room. A safe room not defined as a "Residential Safe Room"

Residential Safe Room. A safe room serving occupants of *dwelling units* and having an *occupant load* not exceeding 16 persons.

SECTION AN503
BEST AVAILABLE REFUGE AREAS

AN503.1 General. Best available refuge area occupants may be injured or killed during a tornado or hurricane. However, people in the best available refuge areas are less likely to be injured or killed than people in other areas of a building.

AN503.2 Occupant Density. The minimum required floor area per occupant for best available refuge area(s) shall be determined in accordance with ICC 500 Table 501.1.1.

AN503.3 Identification of best available refuge areas. Best available refuge areas shall be identified by a registered design professional in accordance with the Wind Hazard Checklist of FEMA 361, Appendix B and FEMA P-431.

SECTION AN504
APPLICABILITY

AN504.1 Required storm shelters or safe rooms.

1. All new kindergarten through 12th grade schools with 50 or more occupants in total, per school, shall have a storm shelter or safe room.
2. All new 911 call stations, emergency operation centers, and fire, rescue, ambulance, and police stations shall have a storm shelter or safe room.

CHAPTER AN6
RESOURCES

SECTION AN601
CONTACTS

Georgia Department of Community Affairs (DCA)
Construction Codes
Georgia State Amendments to the State Minimum Standard Codes
http://www.dca.ga.gov/development/constructioncodes/programs/codeAmendments.asp
Phone: 404-679-3118

Georgia Department of Natural Resources (DNR)
Floodplain Management
4220 International Parkway, Ste. 101
Atlanta, GA 30354-3902
www.georgiadfirm.com
Phone: 404-675-1757

Federal Emergency Management Agency (FEMA)
www.fema.gov; www.floodsmart.gov
www.fema.gov/rebuild/buildingscience/
FEMA Publications and Technical Bulletins:
www.fema.gov/library/index.jsp
www.fema.gov/plan/prevent/floodplain/techbul.shtm

Georgia Emergency Management Agency (GEMA)
Georgia Office of Homeland Security
P.O. Box 18055
Atlanta, GA 30316-0055
www.gema.ga.gov
www.ready.ga.gov
Phone: 404-635-7000

Georgia Association of Regional Commissions (GARC)
www.garc.ga.gov
http://garc.ga.gov/main.php?Regional-Commissions-2
(for assistance in identifying Flood Hazard Areas)

International Code Council (ICC)
www.iccsafe.org

National Weather Service
www.srh.weather.gov

State Fire Marshal's Office
2 Martin Luther King Jr. Drive
Suite 920 / West Tower
Atlanta, Georgia 30334
www.oci.ga.gov
Phone: 404-656-7087

SECTION AN602
EMERGENCY INSPECTION KIT [b]

- □ **Staff's disaster response management plan**
- □ **Team contact list**
- □ **Area maps**
- □ **Official identification**
- □ **Personal identification**
- □ **Inspection forms and placards**
- □ **Communication equipment**
- □ **Clipboard**
- □ **Hard hat**
- □ **Orange safety vest**
- □ **Dust mask**
- □ **Work gloves**
- □ **Steel toe and waterproof boots**
- □ **Whistle**
- □ **First aid kit**
- □ **Latex gloves**
- □ **Safety glasses**
- □ **Sunglasses**
- □ **Pocket knife**
- □ **Matches**
- □ **Antibacterial hand wipes or alcohol-based hand sanitizer**
- □ **Insect repellant (w/ Deet or Picaridin)**
- □ **Sunscreen (SPF 15 or greater)**
- □ **Camera**
- □ **Black markers**
- □ **Pens & pencils**
- □ **Envelope for expense receipts**
- □ **Compass, GPS unit**
- □ **Backpack, waistpack**
- □ **Flashlight and extra batteries**
- □ **Battery-operated radio**
- □ **Duct tape**
- □ **Staples & stapler**
- □ **Staple gun**
- □ **Calculator**
- □ **Tire repair kit**

Remember to grab:

- □ **Personal identification**
- □ **Rain gear, extra clothing**
- □ **Water bottle**
- □ **Prescription medication**
- □ **Cell phone and charger**
- □ **Cash for personal expenses**
- □ **Toiletries**

(b) *Disaster Mitigation: A Guide for Building Departments* by the International Code Council, Inc., copyright 2009

SECTION AN603
SAFETY TIPS [a]

1. **Always travel in teams of at least two people.**
2. **Always wear a hard hat, gloves, goggles, safety vest, and dust masks.**
3. **Always wear safety shoes capable of protecting the toes and bottom of the foot.**
4. **Survey the building exterior completely before entering.**
5. **Enter building only if authorized and if deemed safe to do so.**
6. **Be alert for falling objects.**
7. **In case of fire, injuries or victims, evacuate the area and alert the fire department immediately.**
8. **Avoid downed power lines and buildings under them or water surrounding them.**
9. **In case of gas leaks, shut off the gas (if possible) and report the leak.**
10. **In a flood situation, have a "walking stick."**

(a)*When Disaster Strikes* by the International Code Council, Inc., Seventh Printing: November 2011, copyright 2007

SECTION AN604
MAJOR DISASTER PROCESS

(from link http://www.fema.gov/hazard/dproc.shtm)

A Major Disaster Declaration usually follows these steps:

- **Incident occurs and local government responds,** supplemented by neighboring communities and volunteer agencies. If overwhelmed, turn to the state for assistance;

Generally the local government will issue a local state of emergency

- **The State responds** with state resources, such as the National Guard and state agencies;

Prior to committing state resources, the Governor will declare a state of emergency in the counties impacted by the event for which assistance is needed.

- **Damage assessment** by local, state, federal, and volunteer organizations determine losses and recovery needs;

Generally the locals will submit a preliminary damage assessment to the state and the state will review and determine if state and/or federal assistance is needed. If federal assistance is needed, the state will request FEMA perform a preliminary joint damage assessment. If the Governor determines that the incident is of such severity and magnitude that effective response is beyond the capabilities of the state and the affected local governments then supplementary Federal assistance is requested (next step).

- **A Major Disaster Declaration** is requested by the Governor, based on the damage assessment, and agreement to commit state funds and resources to the long-term recovery;
- **FEMA evaluates** the request and recommends action to the White House based on the disaster, the local community and the state's ability to recover;
- **The President approves** the request or FEMA informs the Governor it has been denied. This decision process could take a few hours or several weeks depending on the nature of the disaster.

SECTION AN605
SAMPLE EVALUATION FORMS AND INSPECTION PLACARDS [b] (following pages)

Figure AN605.1 [b]

ATC-45 Rapid Evaluation Safety Assessment Form

Inspection

Inspector ID: _____ Inspection date: _____

Affiliation: _____ Inspection time: _____ ☐ AM ☐ PM

Areas inspected: ☐ Exterior only ☐ Exterior and interior

Building Description

Building name: _____

Address: _____

_____

Building contact/phone: _____

Number of stories: _____

"Footprint area" (square feet): _____

Number of residential units: _____

Type of Building

☐ Mid-rise or high-rise ☐ Pre-fabricated

☐ Low-rise multi-family ☐ One- or two-family dwelling

☐ Low-rise commercial

Primary Occupancy

☐ Dwelling ☐ Commercial ☐ Government

☐ Other residential ☐ Offices ☐ Historic

☐ Public assembly ☐ Industrial ☐ School

☐ Emergency services ☐ Other: _____

Evaluation

Investigate the building for the conditions below and check the appropriate column.

Observed Conditions:	Minor/None	Moderate	Severe
Collapse, partial collapse, or building off foundation	☐	☐	☐
Building significantly out of plumb or in danger	☐	☐	☐
Damage to primary structural members, racking of walls	☐	☐	☐
Falling hazard due to nonstructural damage	☐	☐	☐
Geotechnical hazard, scour, erosion, slope failure, etc.	☐	☐	☐
Electrical lines / fixtures submerged / leaning trees	☐	☐	☐
Other (specify) _____	☐	☐	☐

Estimated Building Damage (excluding contents)

☐ None

☐ >0 to <1%

☐ 1 to <10%

☐ 10 to <30%

☐ 30 to <70%

☐ 70 to <100%

☐ 100%

☐ See back of form for further comments.

Posting

Choose a posting based on the evaluation and team judgment. Severe conditions endangering the overall building are grounds for an Unsafe posting. Localized Severe and overall Moderate conditions may allow a Restricted Use posting.

☐ **INSPECTED** (Green placard) ☐ **RESTRICTED USE** (Yellow placard) ☐ **UNSAFE** (Red placard)

Record any use and entry restrictions exactly as written on placard: _____

_____

_____

Number of residential units vacated: _____

Further Actions

Check the boxes below only if further actions are needed.

☐ Barricades needed in the following areas: _____

_____

☐ Detailed Evaluation recommended: ☐ Structural ☐ Geotechnical ☐ Other: _____

☐ Substantial Damage determination recommended

☐ Other recommendations: _____

_____

☐ See back of form for further comments.

© Copyright 2004-07, Applied Technology Council.
Permission is granted for unlimited, non-exclusive, non-commercial use and distribution of ATC evaluation forms, provided that this Copyright Notice appears on all copies and the Applied Technology Council name shall not be used in any advertising or publicity of Licensee product. Permission is further subject to the following conditions: (1) Licensee does not reprint, repackage or offer this form for sale or license; and (2) no material gain or financial profit is to be made from any sale or license of this form. Placards may be used without restrictions for their intended use as building postings. All rights not specifically granted to Licensee are herein reserved by ATC.

Figure AN605.2 [b]

ATC-45 Detailed Evaluation Safety Assessment Form

Inspection

Inspector ID: _____ Inspection date: _____

Affiliation: _____ Inspection time: _____ ☐ AM ☐ PM

Final Posting
from page 2

☐ Inspected
☐ Restricted Use
☐ Unsafe

Building Description

Building name: _____

Address: _____

_____

Building contact/phone: _____

Number of stories: _____

"Footprint area" (square feet): _____

Number of residential units: _____

Type of Building

☐ Mid-rise or High-rise
☐ Low-rise multi-family
☐ Low-rise commercial
☐ Pre-fabricated
☐ One- or two-family dwelling
☐ Other: _____

Primary Occupancy

☐ Dwelling
☐ Other residential
☐ Public assembly
☐ Emergency services
☐ Commercial
☐ Offices
☐ Industrial
☐ Other: _____
☐ Government
☐ Historic
☐ School

Evaluation

Investigate the building for the conditions below and check the appropriate column. There is room on the second page for a sketch.

	Minor/None	Moderate	Severe	Comments
Overall hazards:				
Collapse or partial collapse	☐	☐	☐	
Building or story lean or drift	☐	☐	☐	
Fractured or displaced foundation	☐	☐	☐	
Structural hazards:				
Failure of significant element/connection	☐	☐	☐	
Column, pier, or bearing wall	☐	☐	☐	
Roof/floor framing or connection	☐	☐	☐	
Superstructure/foundation connection	☐	☐	☐	
Moment frame	☐	☐	☐	
Diaphragm/horizontal bracing	☐	☐	☐	
Vertical bracing	☐	☐	☐	
Shear wall	☐	☐	☐	
Nonstructural hazards:				
Parapets, ornamentation	☐	☐	☐	
Canopy	☐	☐	☐	
Cladding, glazing	☐	☐	☐	
Ceilings, light fixtures	☐	☐	☐	
Stairs, exits, access walkways, gratings	☐	☐	☐	
Interior walls, partitions	☐	☐	☐	
Mechanical & electrical equipment	☐	☐	☐	
Elevators	☐	☐	☐	
Building contents, other _____	☐	☐	☐	
Geotechnical hazards:				
Slope failure, debris impact	☐	☐	☐	
Ground movement, erosion, sedimentation	☐	☐	☐	
Differential settlement	☐	☐	☐	

Continue on page 2

Figure AN605.2 [b] (Continued)

ATC-45 Detailed Evaluation Safety Assessment Form — Page 2

Building name: _____ Inspector ID: _____

Sketch

Make a sketch of the damaged building in the space provided. Indicate damage points.

Estimated Building Damage
(excluding contents)

- ☐ None
- ☐ >0 to <1%
- ☐ 1 to <10%
- ☐ 10 to <30%
- ☐ 30 to <70%
- ☐ 70 to <100%
- ☐ 100%

Posting

If there is an existing posting from a previous evaluation, check the appropriate box.

Previous posting: ☐ INSPECTED ☐ RESTRICTED USE ☐ UNSAFE Inspector ID: _____ Date: _____

If necessary, revise the posting based on the new evaluation and team judgment. *Severe* conditions endangering the overall building are grounds for an Unsafe posting. Local *Severe* and overall *Moderate* conditions may allow a Restricted Use posting. Indicate the current posting below and at the top of page one, whether the posting has been revised or not.

☐ **INSPECTED** (Green placard) ☐ **RESTRICTED USE** (Yellow placard) ☐ **UNSAFE** (Red placard)

Record any use and entry restrictions exactly as written on placard: _____

Number of residential units vacated: _____

Further Actions

Check the boxes below only if further actions are needed.

☐ Barricades needed in the following areas: _____

☐ Engineering Evaluation recommended: ☐ Structural ☐ Geotechnical ☐ Other _____

☐ Substantial Damage determination recommended

☐ Other recommendations: _____

© Copyright 2004-07, Applied Technology Council.
Permission is granted for unlimited, non-exclusive, non-commercial use and distribution of ATC evaluation forms provided that this Copyright Notice appears on all copies and the Applied Technology Council name shall not be used in any advertising or publicity of Licensee product. Permission is further subject to the following conditions: (1) Licensee does not reprint, repackage or offer this form for sale or license; and (2) no material gain or financial profit is to be made from any sale or license of this form. Placards may be used without restrictions for their intended use as building postings. All rights not specifically granted to Licensee are herein reserved by ATC.

INSPECTED

LAWFUL OCCUPANCY PERMITTED

This structure has been inspected (as indicated below) and no apparent structural hazard has been found.

☐ **Inspected Exterior Only**

☐ **Inspected Exterior and Interior**

Report any unsafe condition to local authorities; reinspection may be required.

Inspector Comments:

_____

_____

_____

_____

Facility Name and Address:

_____

_____

_____

Date _____

Time _____

This facility was inspected under emergency conditions for:

_____

(Jurisdiction)

Inspector ID / Agency

_____

_____

_____

Do Not Remove, Alter, or Cover this Placard until Authorized by Governing Authority

Figure AN605.3 [b]

RESTRICTED USE

Caution: This structure has been inspected and found to be damaged as described below:

_____

_____

_____

_____

Entry, occupancy, and lawful use are restricted as indicated below:

☐ Do not enter the following areas: _____

_____

☐ Brief entry allowed for access to contents: _____

_____

☐ Other restrictions: _____

_____

Facility name and address:

_____

_____

_____

Date _____

Time _____

This facility was inspected under emergency conditions for:

_____

(Jurisdiction)

Inspector ID / Agency

_____

_____

_____

Do Not Remove, Alter, or Cover this Placard until Authorized by Governing Authority

Figure AN605.4 [b]

UNSAFE

DO NOT ENTER OR OCCUPY
(THIS PLACARD IS NOT A DEMOLITION ORDER)

This structure has been inspected, found to be seriously damaged and is unsafe to occupy, as described below:

_____
_____
_____
_____
_____
_____

Do not enter, except as specifically authorized in writing by jurisdiction. Entry may result in death or injury.

Facility Name and Address:

_____
_____
_____

Date _____

Time _____

This facility was inspected under emergency conditions for:

_____
(Jurisdiction)

Inspector ID / Agency

_____
_____
_____

Do Not Remove, Alter, or Cover this Placard until Authorized by Governing Authority

Figure AN605.5 [b]

CHAPTER AN7
REFERENCES
REFERENCED STANDARDS

ASCE Standards ASCE/SEI 24-05 Flood Resistant Design and Construction
FEMA P-320, Third Edition / August 2008 Taking Shelter From the Storm: Building a Safe Room For Your Home or Small Business, Includes Construction Plans and Cost Estimates
FEMA 361, Second Edition / August 2008 Design and Construction Guidance for Community Safe Rooms
FEMA P-431, Second Edition/October 2009 Tornado Protection: Selecting Refuge Areas in Buildings
FEMA Technical Bulletin 2, Table 2. Types, Uses, and Classifications of Materials

REFERENCED RESOURCES

(a) *When Disaster Strikes* by the International Code Council, Inc., Seventh Printing: November 2011, copyright 2007
(b) *Disaster Mitigation: A Guide for Building Departments* by the International Code Council, Inc., copyright 2009

INDEX OF FIGURES:

Figure AN103.3 **Post Disaster Building Safety Evaluation Chart** [a] **10**
Figure AN605.1 **ATC-45 Rapid Evaluation Form** **18**
Figure AN605.2 **ATC-45 Detail Evaluation Form** **19**
Figure AN605.3 **Inspected Placard** **21**
Figure AN605.4 **Restricted Placard** **22**
Figure AN605.5 **Unsafe Placard** **23**

INDEX

B

Best available refuge area .....Chapter 5, AN501.1, AN502.2, AN503

C

Connectors AN303.3
Conventional Light-Frame Construction AN401.2.3

E

Emergency operation centers AN504.1
Enclosure classification AN403.3
Essential Facility AN103.3
Evaluation
Detailed AN103.2.1, AN103.3.2.2, AN103.4
Engineering .....AN103.2.2, AN103.2.3, Figure 103.3
Rapid .....AN103.2.1, AN103.4, Figure AN605.1
Exposure AN403.2

F

Fasteners AN303.3
Flood
500-Year .....Chapter 2, AN302.1.2, AN302.1.3, AN302.1.4
Base .....Chapter 2, AN302.1.1
Design .....Chapter 2
Future-conditions .....Chapter 2, AN302.1.1, AN302.1.2, AN302.1.3, AN302.1.4
Flood Elevation
Advisory Base ...Chapter 2, AN302.1.2, AN302.1.3, AN302.1.4
Base .. ..Chapter 2, AN302.1.2, AN302.1.3, AN302.1.4
Design .....Chapter 2, AN302.1.2, AN302.1.3, AN302.1.4
Futures-conditions .....Chapter 2
Flood Hazard Area ..AN102.1.1, Chapter 2, AN301.1, AN302.1, AN302.1.1
Flood-(Damage)Resistant Material .....Chapter 2, AN303
Freeboard .....Chapter 2, Chapter 3

G

Grade Schools AN504

I

Impact Resistant AN404.2, AN405.2, AN406.2
Inspections AN103.1, AN103.2

M

Masonry
Empirical AN401.2.1
Unreinforced AN401.2.2

O

Opening Protection AN401.1, AN404.2, AN405.2, AN406.2

P

Placards .....AN103.2.1, AN103.5, Figure AN605.3-AN605.5

S

Safe rooms
Community AN502.2
Occupant density AN501.2, AN503.2
Residential AN501.1, AN502, AN502.2
Sample Ordinance .....Page 2,3,and 4
Storm shelters .....AN101.3.3, Table AN401.1, Chapter AN5
Substantial alterations AN102.1.1
Substantial improvements AN101.3.1, AN302.1.1

T

Table of Contents .....Page 7

U

Ultimate design wind speed AN404.1, AN405.1, AN406.1

V

Violations AN101.4

W

Wind Directionality Factor AN403.1

Wind Load ...

CITY COUNCIL MEETING
DATE: April 7, 2014

TITLE: Wayfinding Signage.

PURPOSE: Authorize the Interim City Manager to sign the encroachment permit application for GaDOT for Application and Permit for Special Encroachment along DOT regulated roadways.

RECOMMENDATION: Interim City Manager recommends approval.

HISTORY/ANALYSIS:

Wayfinding is the process by which one travels to a destination in an unfamiliar environment. A wayfinding system uses navigational elements to guide travelers, while simultaneously enhancing a municipality's identify. Well designed, well-placed signs create aesthetic harmony in a community and reinforce a positive sense of place for visitors. Wayfinding signs help visitors and residents find their way, promote pedestrian friendly environment, and reduce congestion.

In September 2006, the Camden County Board of Commissioners and the cities of Kingsland, St. Marys, and Woodbine solicited proposals to plan a wayfinding system for the county and its municipalities. The wayfinding system was financed by a grant available to communities that have received the Signature Communities designation from the Georgia Department of Community Affairs. Signature Communities are selected based on their record of and potential for real, measurable achievement. The wayfinding system is identified within the countywide comprehensive plan as a key initiative. Part of the motivation for the project was the 2005 study prepared by the Georgia Institute of Technology's Center for Quality Growth and Regional Development which recommended an effective wayfinding system as one component in a comprehensive redevelopment strategy for the county. Representative from each municipality and the county participated in the stakeholders committee that guided project development.

In April 2013, St. Marys City Council approved the Adoption of the Camden County Wayfinding and Signage Master Plan. To date, sign characteristics have been lined out and five signs are proposed/will be installed at the following locations: SR 405 NB OFF RAMP EXIT 1 / SR 405 NB ON RAMP EXIT 1 / HADDOCK ROAD NB AT ST. MARYS ROAD / ST. MARYS ROAD WB OFF RAMP AT SR 40 / ST. MARYS ROAD EB OFF RAMP AT SR 40. The installation of these signs is pending processing and approval of the encroachment application from GaDOT.

Department Director: _____

City Manager: _____

CITY OF ST. MARYS

EXIT 1 AND INTERSTATE 95 INTERCHANGE

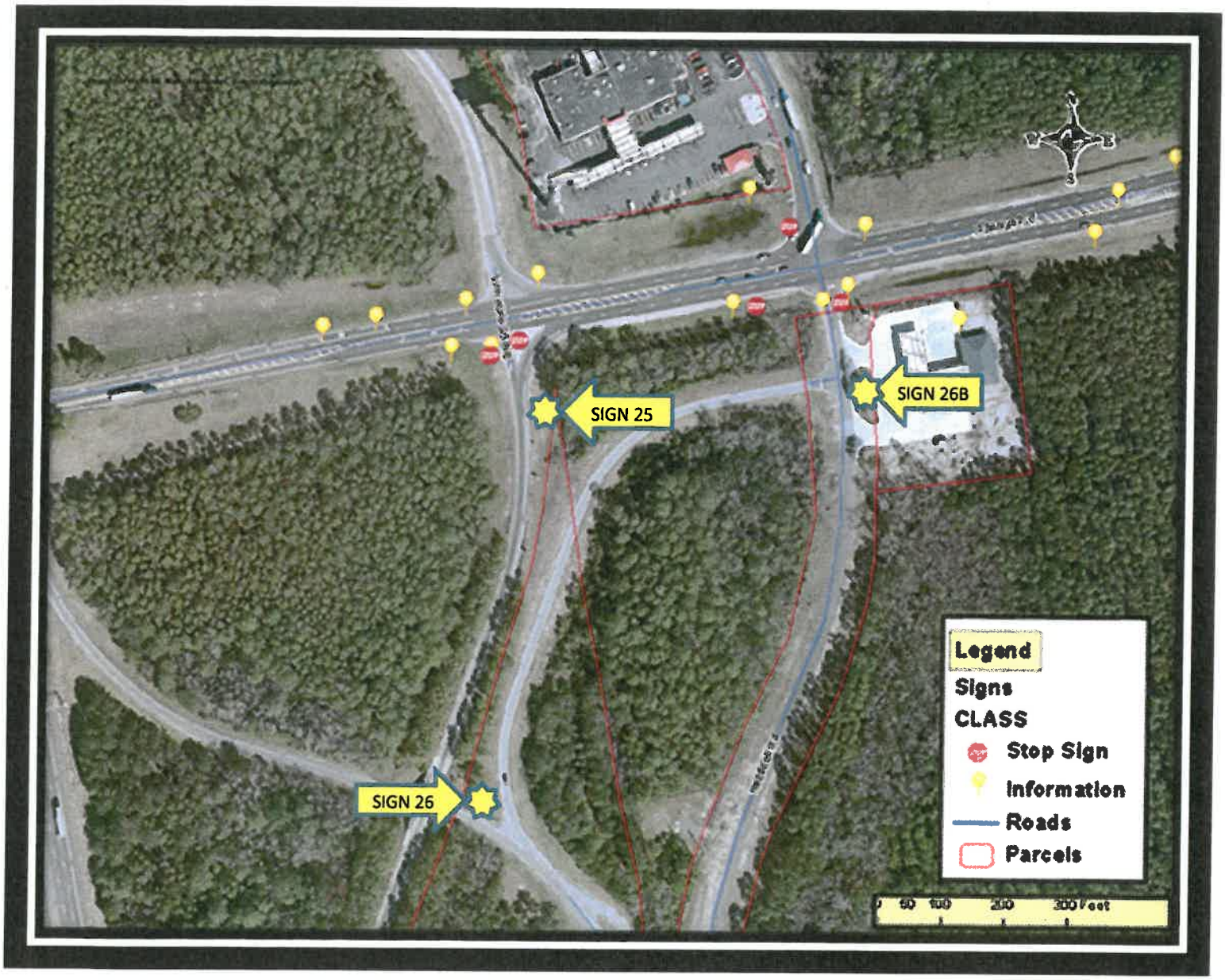

SIGN 25	SIGN 26	SIGN 26B
HISTORIC DOWNTOWN ST. MARYS> <HISTORIC DOWNTOWN KINGSLAND CROOKED RIVER STATE PARK> LAT (30.4532) LONG (-81.3852)	HISTORIC ST. MARYS> NAVAL SUBMARINE BASE KINGSBAY> <HISTORIC DOWNTOWN KINGSLAND LAT (30.4533) LONG (-81.3351)	HISTORIC DOWNTOWN ST. MARYS> <HISTORIC DOWNTOWN KINGSLAND CROOKED RIVER STATE PARK> LAT (30.4532) LONG (-81.3852)

CITY OF ST. MARYS

ST MARYS ROAD & GA HIGHWAY 40 INTERSECTIONS

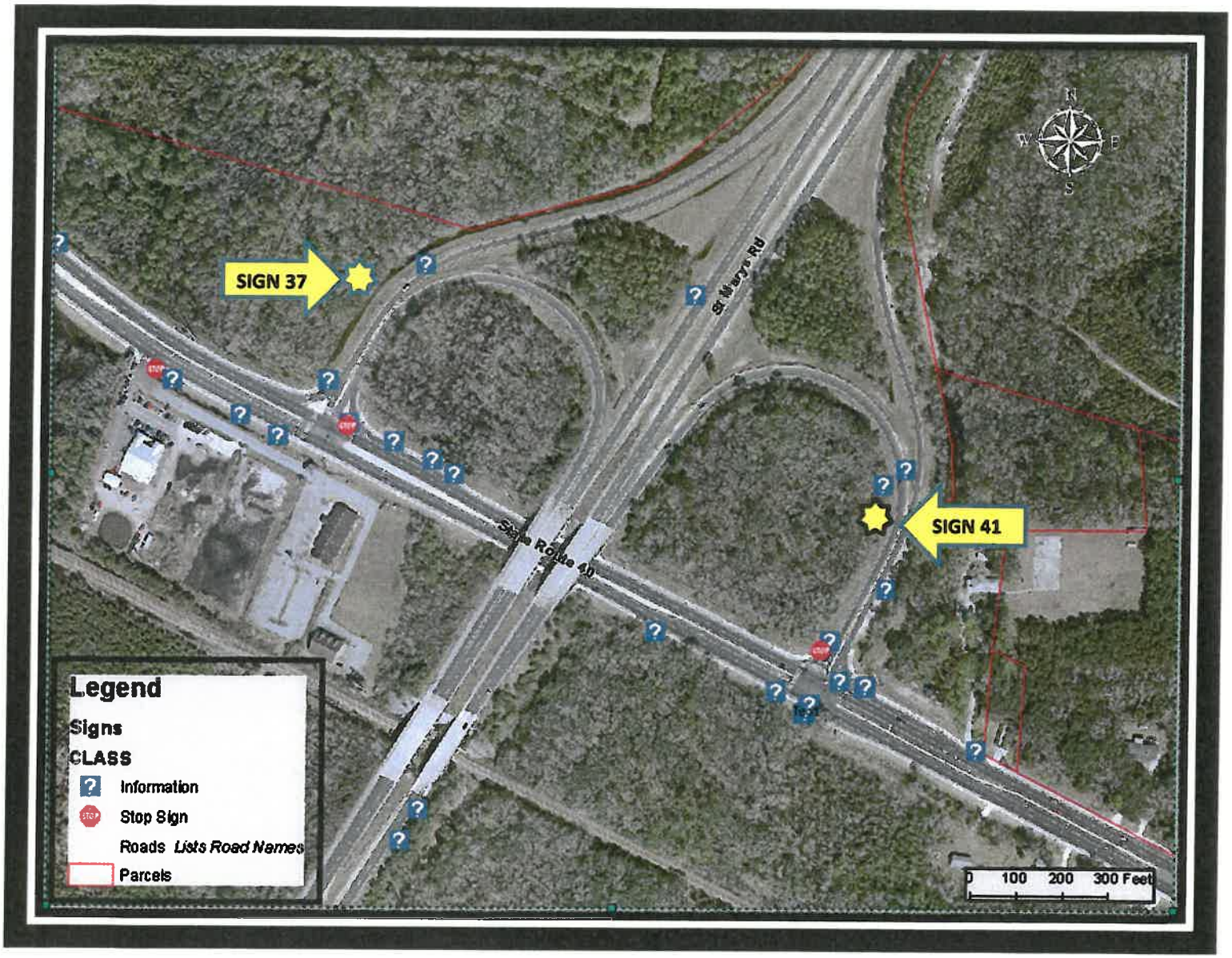

SIGN 37

<HISTORIC DOWNTOWN ST MARYS
<CUMBERLAND ISLAND NATIONAL SEASHORE
HISTORIC DOWNTOWN KINGSLAND>
LAT (30.4545) LONG (-81.3622)

SIGN 41

HISTORIC DOWNTOWN KINGSLAND>
<ST MARYS WELCOME CENTER
<CUMBERLAND ISLAND NATIONAL SEASHORE
LAT (30.4540) LONG (-81.3610)

Order Release Form

YOUR ORDER IS ON HOLD UNTIL THIS PROOF SHEET IS RETURNED WITH A SIGNATURE.

COLOR KEY						
	PMS:White	PMS: 1395 C	PMS:Drk Blue	PMS: Med Green	PMS:Black	PMS:

DALTON SIGNS, INC. ALLOWS TWO CHANGE REQUEST BEFORE ADDITIONAL DESIGN FEES ARE INCURRED

By signing this proof sheet, I authorize Dalton Signs to begin production on this project. I agree the colors, spelling, layout, verbiage, numbers, punctuation, and positioning are EXACTLY AS I REQUEST AND ACCEPT FINANCIAL RESPONSIBILITY for the production of this product as illustrated.

Accepted As Is _____ **DATE**

Change As Noted:

© 2011 Dalton Signs Inc.
This design is the sole property of Dalton Signs Inc. and may not be used, or duplicated in any form without the expressed written permission of Dalton Signs Inc. This drawing was created to assist you in visualizing your sign criteria. We cannot guarantee exact matches due to various materials used. Finished dimensions may vary slightly on any illustration.

DATE:

Estimate / Order #:

Customer: Renee Coakley
Company: City of St. Marys
Address:
City: St. Marys
State/Zip: GA 31558
Phone: 912-882-8111

Dalton Signs Inc.
610 N. Lee Street
Kingsland, GA 31548
912.576.5958 P
877.559.SIGN (7446)
912.576.2355 F

Order Release Form

YOUR ORDER IS ON HOLD UNTIL THIS PROOF SHEET IS RETURNED WITH A SIGNATURE.

Trailblazing Signs

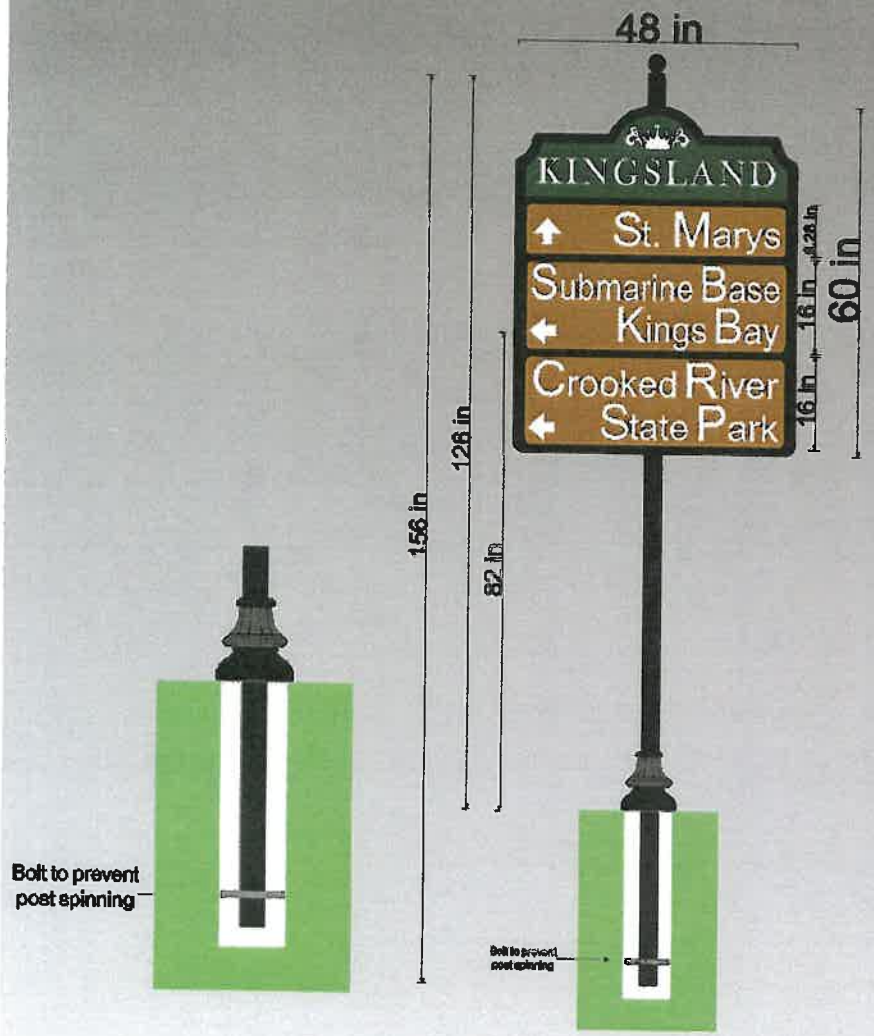

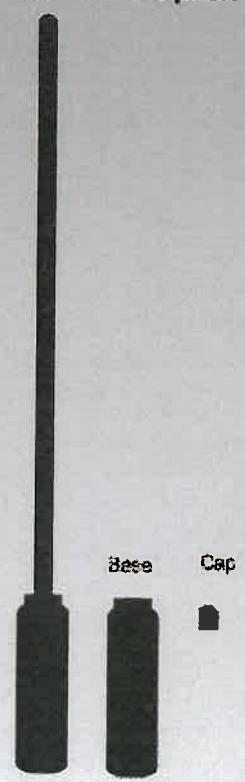

Super durable material is perfect for use with vinyl copy or digital prints. Aluminum with HDPE core. Lightweight and highly durable FHWA approved.

Letter Visibility Chart

Viewing Distance	Min. Letter Height
100Ft	4"
250Ft	10"
360Ft(city block)	16"
500Ft	22"
750Ft	33"
1000Ft	43"
1320Ft	57"

COLORS

- 3308C
- 1395 PC
- Black
- COLOR
- COLOR
- COLOR

DATE: 5.6.13

ESTIMATE/ ORDER #: 14860

CONTACT: Beth Gowen

DESIGNER: Brittney Carter

CLIENT: Kingsland Wayfinding

CITY,STATE: Kingsland, GA

© 2011 Dalton Signs Inc.
This design is the property of Dalton Signs Inc. and may not be used, or reproduced in any form without the expressed written permission of Dalton Signs Inc. The drawing was created using the information provided by your sign specialist, and is intended to show your sign as it will look when finished. Minor variations due to vehicle or manufacturer specifications may vary slightly on any fabrication.

Dalton Signs Inc.
PO Box 1260
610 N. Lee Street
Kingsland, GA 31548
912.576.5858 P
877.958.SIGN (7446)
912.576.8606 F

DALTON SIGNS, INC. ALLOWS TWO CHANGE REQUEST BEFORE ADDITIONAL DESIGN FEES ARE INCURRED
I authorize Dalton Signs to begin production on this project. I agree the colors, spelling, layout, verbiage, numbers, punctuation, and positioning are EXACTLY AS I REQUEST AND ACCEPT FINANCIAL RESPONSIBILITY for the production of this product as illustrated.

ACCEPTED AS IS _____ DATE _____ Change As Noted: ☐

CITY COUNCIL MEETING
April 7, 2014

TITLE: Resolution Georgia Department of Transportation for Airport Project

PURPOSE: Approve GDOT Resolution

RECOMMENDATION: Approval

HISTORY/ANALYSIS:
It is necessary to make improvements to existing St Marys Airport for Crack Sealing and Remarking. The City of St. Marys will receive a contract from the Georgia Department of Transportation (GDOT) contract AP014-9019-16 (039) Camden County to provide reimbursement for the costs associated with the above noted services up to a maximum amount of $157,825.00 of which up to $155,457.00 will be FAA Funds and up to $2,368.00 State Funds and requiring a local match of approximately $5,813.75. It is necessary for the City Council to authorize the Mayor, to sign such documents that may be necessary to complete this project and accept a contract from the GDOT to include FAA and State Funds, and furthermore authorizes funding of the contract match from available budgeted funds.

Department Director: Jenny Brown

City Manager:

RESOLUTION

AUTHORIZATION TO ACCEPT GEORGIA DEPARTMENT OF TRANSPORTATION CONTRACT FOR COSTS ASSOCIATED WITH CRACK SEAL AND REMARK AIRFIELD AT THE ST MARYS AIRPORT

WHEREAS, THE CITY OF ST. MARYS desires to make improvements to existing St. Marys Airport by soliciting and receiving bids from Axtells, Inc for construction of Crack Seal and Remarking, Robert and Company for project Design, Resident Inspection and Construction Administrative Services and Lamp, Roy & Associates, Inc. and Cantrell Real Estate Inc. for Appraisal and Review Appraisal Services and;

WHEREAS, THE CITY OF ST. MARYS will receive a contract from the Georgia Department of Transportation (GDOT) contract AP014-9019-16 (039) Camden County to provide reimbursement for the costs associated with the above noted Services up to a maximum amount of $157,825.00 of which up to $155,457.00 will be Federal Aviation Administration (FAA) Funds and up to $2,368.00 State Funds and requiring a local match of approximately $5,813.75 and;

WHEREAS, THE CITY OF ST. MARYS has or will enter into separate contracts with the above named firms for providing above noted services and;

NOW, THEREFORE, BE IT RESOLVED THAT the ST. MARYS City Council authorizes the Mayor, City Attorney and Staff to sign such documents that may be necessary to complete this project and accept a contract from the Georgia Department of Transportation (GDOT) to include FAA and State Funds, and furthermore authorizes funding of THE CITY OF ST. MARYS contract match from available budgeted funds.

Adopted this _____ day of _____, 2014.

CITY OF ST. MARYS, GEORGIA

BY:_____
Its Mayor John F. Morrissey

ATTEST:_____
Its Clerk Deborah Walker-Reed

_____
Councilmember Sam L. Colville

_____
Councilmember Jim Gant

_____
Councilmember Robert L. Nutter

_____
Councilmember David Reilly

_____
Councilmember Nancy Stasinis

_____
Councilmember Linda P. Williams

Robert and Company
Engineers-Architects-Planners

Proj: **Crack Seal & Remark Runway 13-31, Taxiway and Apron at St Marys Airport**

Recorded By: SVC **Date: 03/17/14** **Certified True and Correct Tabulation of Bids**

Prepared By: SVC **Date: 03/17/14** **By: NMB For Robert and Company**

RAC No. 14001.20 Bid Opening Date: 03/13/2014

BID TABULATION - SCHEDULE A - CRACK SEAL

					Engineer's Preliminary Cost Estimate		Axtells, Inc.		Remac, Inc.		Wall Asphalt		JJ Cunningham, LLC		Hi-Lite Marking		Costello Industries, Inc.		CPR Contracting, LLC	
FAA Item No.	RAC Item No.	Description	Approx. Quantity	Unit	UNIT PRICE	AMOUNT	**UNIT PRICE**	**AMOUNT**	UNIT PRICE	AMOUNT	UNIT PRICE	AMOUNT	UNIT PRICE	AMOUNT	UNIT PRICE	AMOUNT	UNIT PRICE	AMOUNT	UNIT PRICE	AMOUNT
	151	Mobilization	1	LS	$3,003.00	$3,003.00	**$2,500.00**	**$2,500.00**	$1,250.00	$1,250.00	$800.00	$800.00	$5,000.00	$5,000.00	$0.00	$0.00	$5,000.00	$5,000.00	$2,500.00	$2,500.00
P-605-5.1		Joint Sealing Filler - Runway 13-31	27,500	LF	$0.60	$16,500.00	**$0.45**	**$12,375.00**	$0.49	$13,475.00	$0.52	$14,300.00	$0.55	$15,125.00	$0.00	$0.00	$0.59	$16,225.00	$2.44	$67,100.00
P-605-5.2		Joint Sealing Filler - Taxiway	17,600	LF	$0.60	$10,560.00	**$0.45**	**$7,920.00**	$0.49	$8,624.00	$0.52	$9,152.00	$0.55	$9,680.00	$0.00	$0.00	$0.59	$10,384.00	*$2.56	*$45,056.00
P-605-5.3		Joint Sealing Filler - Apron	4,950	LF	$0.60	$2,970.00	**$0.47**	**$2,326.50**	$0.49	$2,425.50	$0.52	$2,574.00	$0.55	$2,722.50	$0.00	$0.00	$0.59	$2,920.50	$4.15	$20,542.50
					TOTAL SCH A:	**$33,033.00**	**TOTAL:**	**$25,121.50**	**TOTAL:**	**$25,774.50**	**TOTAL:**	**$26,826.00**	**TOTAL:**	**$32,527.50**	**TOTAL:**	**$0.00**	**TOTAL:**	**$34,529.50**	**TOTAL:**	**$135,198.50**

BID TABULATION - SCHEDULE B - MARKING AND STRIPING

					Engineer's Preliminary Cost Estimate		Axtells, Inc.		Remac, Inc.		Wall Asphalt		JJ Cunningham, LLC		Hi-Lite Marking		Costello Industries, Inc.		CPR Contracting, LLC	
FAA Item No.	RAC Item No.	Description	Approx. Quantity	Unit	UNIT PRICE	AMOUNT	**UNIT PRICE**	**AMOUNT**	UNIT PRICE	AMOUNT	UNIT PRICE	AMOUNT	UNIT PRICE	AMOUNT	UNIT PRICE	AMOUNT	UNIT PRICE	AMOUNT	UNIT PRICE	AMOUNT
	151	Mobilization	1	LS	$5,794.00	$5,794.00	**$2,500.00**	**$2,500.00**	$0.00	$0.00	$0.00	$0.00	$7,500.00	$7,500.00	$2,500.00	$2,500.00	$0.00	$0.00	$6,000.00	$6,000.00
P-620-5.1		Runway 13-31 Painting and Marking, White, Including reflective material	4,390	SY	$9.00	$39,510.00	**$4.75**	**$20,852.50**	$0.00	$0.00	$0.00	$0.00	$6.00	$26,340.00	$7.65	$33,583.50	$0.00	$0.00	$13.74	$60,318.60
P-620-5.2		Runway 13-31 Painting and Marking, Yellow, Including reflective material	290	SY	$9.00	$2,610.00	**$4.80**	**$1,392.00**	$0.00	$0.00	$0.00	$0.00	$6.00	$1,740.00	$9.00	$2,610.00	$0.00	$0.00	$17.76	$5,150.40
P-620-5.3		Taxiway Painting and Marking, Yellow, Including reflective material	350	SY	$9.00	$3,150.00	**$4.80**	**$1,680.00**	$0.00	$0.00	$0.00	$0.00	$6.00	$2,100.00	$9.00	$3,150.00	$0.00	$0.00	$17.48	$6,118.00
P-620-5.4		Apron Painting and Marking, Yellow	35	SY	$6.00	$210.00	**$4.90**	**$171.50**	$0.00	$0.00	$0.00	$0.00	$6.00	$210.00	$72.00	$2,520.00	$0.00	$0.00	$19.08	$667.80
P-620-5.5		Apron Painting and Marking, Black	20	SY	$6.00	$120.00	**$4.90**	**$98.00**	$0.00	$0.00	$0.00	$0.00	$6.00	$120.00	$72.00	$1,440.00	$0.00	$0.00	$17.76	$355.20
P-620-5.6		Taxiway Painting and Marking, Black	715	SY	$6.00	$4,290.00	**$4.75**	**$3,396.25**	$0.00	$0.00	$0.00	$0.00	$5.90	$4,218.50	$8.10	$5,791.50	$0.00	$0.00	$13.81	$9,874.15
	656	Obliteration of Pavement Markings	575	SY	$14.00	$8,050.00	**$4.80**	**$2,760.00**	$0.00	$0.00	$0.00	$0.00	$4.00	$2,300.00	$6.75	$3,881.25	$0.00	$0.00	$14.03	$8,067.25
					TOTAL SCH B:	**$63,734.00**	**TOTAL:**	**$32,850.25**	**TOTAL:**	**$0.00**	**TOTAL:**	**$0.00**	**TOTAL:**	**$44,528.50**	**TOTAL:**	**$55,476.25**	**TOTAL:**	**$0.00**	**TOTAL:**	**$96,551.40**

TOTAL SCH A:	**$33,033.00**	**TOTAL SCH A:**	**$25,121.50**	TOTAL SCH A:	$25,774.50	TOTAL SCH A:	$26,826.00	TOTAL SCH A:	$32,527.50	TOTAL SCH A:	$0.00	TOTAL SCH A:	$34,529.50	TOTAL SCH A:	$135,198.50
TOTAL SCH B:	**$63,734.00**	**TOTAL SCH B:**	**$32,850.25**	TOTAL SCH B:	$0.00	TOTAL SCH B:	$0.00	TOTAL SCH B:	$44,528.50	TOTAL SCH B:	$55,476.25	TOTAL SCH B:	$0.00	TOTAL SCH B:	$96,551.40
GRAND TOTAL:	**$96,767.00**	**GRAND TOTAL:**	**$57,971.75**	GRAND TOTAL:	$25,774.50	GRAND TOTAL:	$26,826.00	GRAND TOTAL:	$77,056.00	GRAND TOTAL:	$55,476.25	GRAND TOTAL:	$34,529.50	GRAND TOTAL:	$231,749.90

*** Bid discrepancy**

	Schedule A	**Schedule B**	**Grand Total**
Bid Total:	**$134,942.50**	**$96,551.40**	**$231,493.90**
Actual Total:	**$135,198.50**	**$96,551.40**	**$231,749.90**
Difference:	**$256.00**	**$0.00**	**$256.00**

*Corrections have been made to the total above for CPR Contracting, LLC.
Corrections shown above represent corrected values.

CITY COUNCIL MEETING
April 7, 2014

TITLE: Welcome Center Building Improvements

PURPOSE: To provide funds for improvements to the Welcome Center Building

RECOMMENDATION: Approval

HISTORY/ANALYSIS: During the March 17, 2014 City Council meeting, council voted to provide funds up to $5,000 for improvement to the Welcome Center building which includes landscaping, painting the exterior door and shutters, replace the sign, and the re-creation of the St. Marys history timeline. This budget ordinance will amend the FY14 Budget to reflect council's decision.

Department Director: Jenny Brown

City Manager: Robert T. Hatch Jr.

AN ORDINANCE TO AMEND THE FISCAL YEAR 2014
BUDGET ORDINANCE, CITY OF ST. MARYS, GEORGIA

BE IT AND IT IS HEREBY ORDAINED by the Mayor and Council of the City of St. Marys, Georgia in regular session lawfully assembled for City purposes:

That it is necessary to amend the FY14 Budget to reflect a vote from City Council at the March 17, 2014 meeting to provide funds for improvements to be made to the St. Marys Welcome Center Building.

That the above transaction can be fulfilled by changing the following budget accounts:

Budget Account	Adopted Budget	Net Change	Proposed
100-51510-61.1015 OP T/F Out to Tourism	$ 22,000	+ $ 5,000	$ 27,000
100-38.0001 Fund Equity	$ 409,823	+ $ 5,000	$ 414,823
275-39.1200 OP T/F In – General Fund	$ 22,000	+ $ 5,000	$ 27,000
275-57540-52.2221 Tourism Building Repairs	$ 15,000	+ $ 5,000	$ 20,000

ADOPTED in legal assembly this _____ day of _____, 2014.

CITY OF ST. MARYS, GEORGIA

By:_____
John Morrissey, Its Mayor

Attest:_____
Deborah Walker-Reed, Its City Clerk

CITY COUNCIL MEETING
April 7, 2014

TITLE: Record Funds Received for Airport

PURPOSE: Increase the Airport budget to reflect funds received

RECOMMENDATION: Approval

HISTORY/ANALYSIS:
The City of St. Marys will receive funds from the Georgia Department of Transportation Airport Aid Program for repairs to be made to runway 13-31 at the St. Marys Airport. It is necessary to amend the FY14 budget to reflect the funds received and the expenditures associated with the repairs.

Department Director: Jerry Brown

City Manager: [signature]

AN ORDINANCE TO AMEND THE FISCAL YEAR 2014
BUDGET ORDINANCE, CITY OF ST. MARYS, GEORGIA

BE IT AND IT IS HEREBY ORDAINED by the Mayor and Council of the City of St. Marys, Georgia in regular session lawfully assembled for City purposes:

That it is necessary to amend the FY14 Budget to reflect funds received for the repairs to runway 13-31 at the St. Marys Airport, and the expenditures associated with the repairs.

Budget Account	Adopted Budget	Net Change	Proposed
General Fund			
100-57563-52.1310 Airport-Engineers/Consultants	$ 0	+ $ 19,000	$ 19,000
100-39.1200 Operating Transfer In - Multi Grant	$ 7,500	+ $ 19,000	$ 26,500
Multi Grant Fund			
251-38.9010 Miscellaneous Income	$ 0	+ $ 19,000	$ 19,000
251-59000-61.1030 Operating Transfer Out – General Fund	$ 7,500	+ $ 19,000	$ 26,500

ADOPTED in legal assembly this _____ day of _____, 2014.

CITY OF ST. MARYS, GEORGIA

By:_____
John Morrissey, Its Mayor

Attest:_____
Deborah Walker-Reed, Its City Clerk

CITY COUNCIL MEETING
April 7, 2014

TITLE: CODE ENFORCEMENT

PURPOSE: Create the department of Code Enforcement

RECOMMENDATION: Approval

HISTORY/ANALYSIS: Council approved the budget for a code enforcement position. In order to provide the necessary equipment for this position, it is requested to move funds within the code enforcement department of pay for the items.

Department Director:_____

City Manager:_____

AN ORDINANCE TO AMEND THE FISCAL YEAR 2014
BUDGET ORDINANCE, CITY OF ST. MARYS, GEORGIA

BE IT AND IT IS HEREBY ORDAINED by the Mayor and Council of the City of St. Marys, Georgia in regular session lawfully assembled for City purposes:

That it is necessary to amend the FY14 Budget to cover expenses for the Code Enforcer.

That the above transaction can be fulfilled by changing the following budget accounts in the General Fund:

Budget Account	Adopted Budget	Net Change	Proposed
100-57450-53.1600 Small Equipment	$0	+$2,000	$ 2,000
100-57450-51.1100 Salaries	$14,365	-$2,000	$12,365

ADOPTED in legal assembly this _____ day of _____, 2014.

CITY OF ST. MARYS, GEORGIA

By:_____
John F. Morrissey, Its Mayor

Attest:_____
Deborah Walker-Reed, Its City Clerk

The following is an overview of the City's revenue and expenditures for the month ending February 28, 2014, which is the eighth month of fiscal year FY2014. All reports are on a cash basis.

General Fund:

Total revenue for the General Fund was $6,456,883 plus $273,215 of allocated budgeted fund equity for a total of $6,730,098. Total year to date expenditures as of 2/28/14 was $5,507,917 for a revenue over expenditures balance of $1,222,181. Available cash balance was $5,216,958.

Tourism

Total revenue for Tourism fund was $99,940. Total year to date expenditures as of 2/28/14 was $107,031 for a shortfall of $(7,091).

SPLOST

Total revenues received for SPLOST was $85,903 plus interest of $8 for total revenues of $85,910 in 2/28/14. Total year to date expenditures was $148,520 for a shortfall of ($62,610). This is a reimbursement fund which will net to zero at the end of the fiscal year.

Water/Sewer Fund

Total revenue for the Water/Sewer fund was $4,284,706 which includes $185,046 of allocated budgeted fund equity. Total year to date expenses as of 2/28/14 was $3,593,201 for a revenue over expenditures balance of $691,505. Available cash balance was $4,995,868.

Solid Waste Fund

Total revenue for the Solid Waste fund was $692,764. Total year to date expenditures as of 2/28/14 was $587,526 for a revenue over expenditures balance of $105,238. Available cash balance was $428,795.

Aquatic

Total revenue for the Aquatic Center was $122,918. Total year to date expenditures as of 2/28/14 was $179,388 for a shortfall of $(56,469).

YTD 2/1/2014 Month Reported

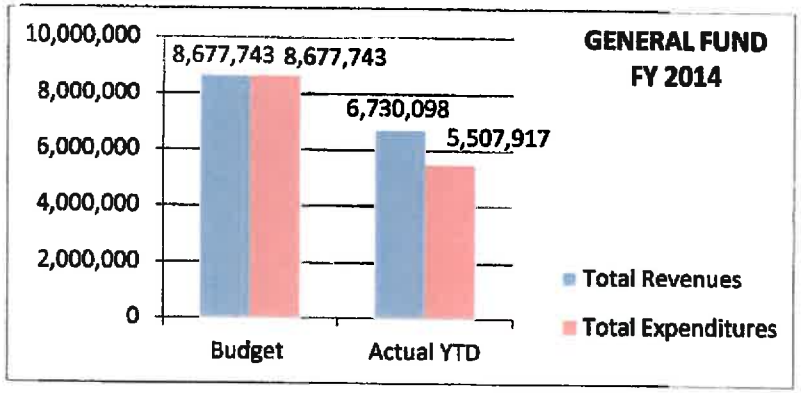

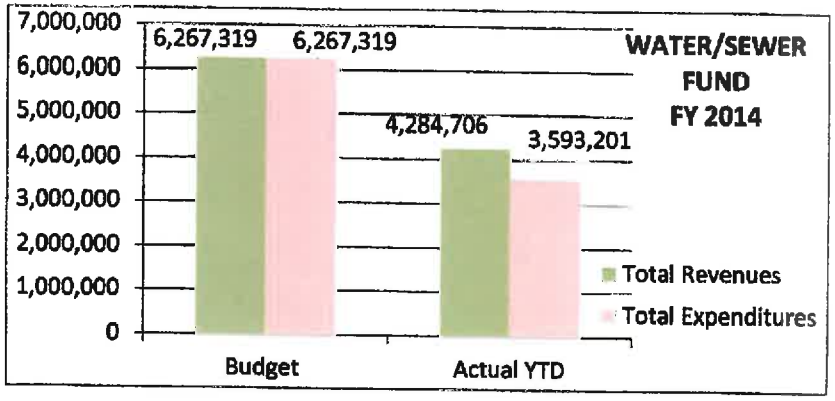

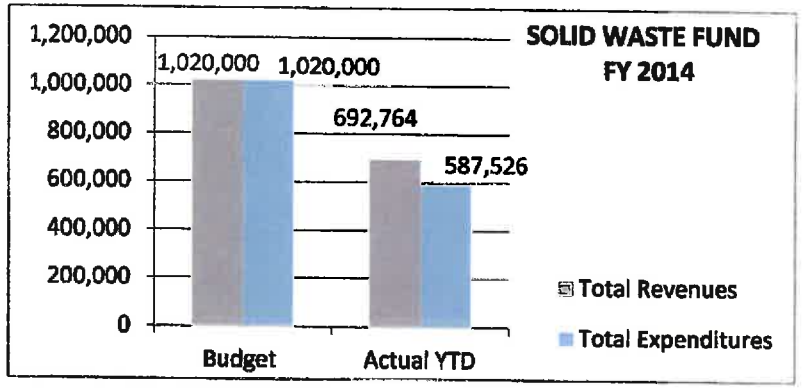

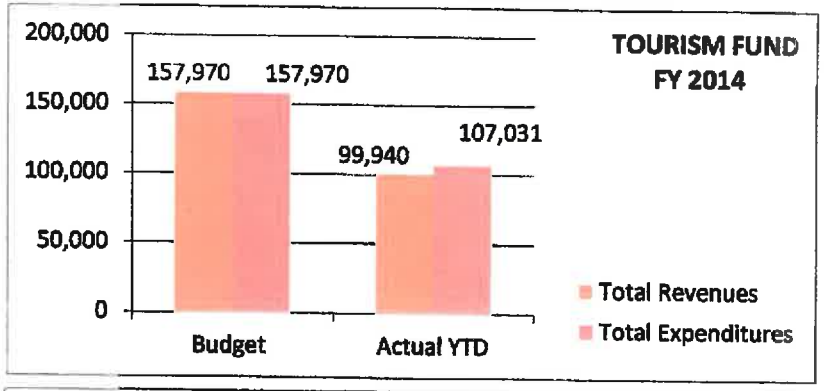

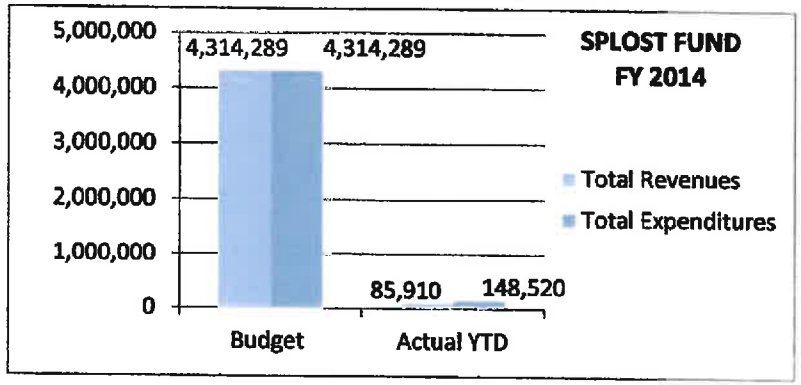

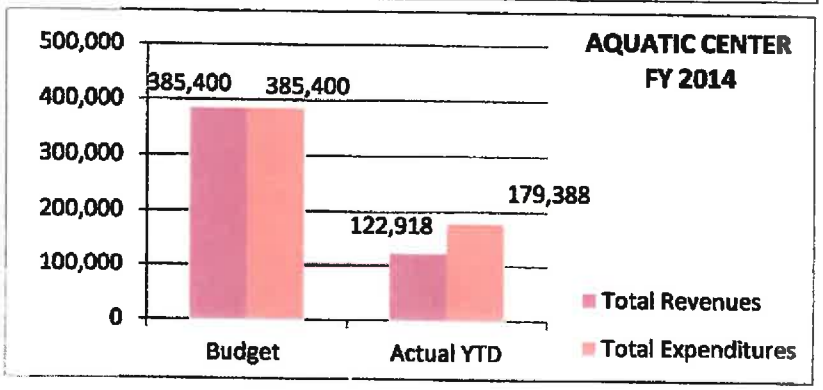

CITY OF ST. MARYS
REVENUE & EXPENSE REPORT (UNADUDITED)
Feb-14

FINANCIAL SUMMARY			MONTHS COMPLETED % YEAR COMPLETED		8 66.67%
100-GENERAL FUND REVENUES	CURRENT BUDGET	CURRENT PERIOD	FEB 2014	FEB 2013	% YTD BUDGET
100.31.1100 REAL PROP CURRENT YEAR	$ 2,597,400	$ 23,347	$ 2,408,103	$ 2,566,434	93%
100.31.1190 OVERPAYMENTS/ADJUST TAXES	$ -	$ (170)	$ 359	$ 433	#DIV/0!
100.31.1208 2008 PROPERTY TAX	$ 5,000	$ 225	$ 9,516	$ 39,267	190%
100.31.1209 2009 PROPERTY TAX	$ 10,000	$ 524	$ 16,591	$ 18,755	166%
100.31.1210 2010 PROPERTY TAX	$ 10,000	$ 410	$ 20,876	$ 33,493	209%
100.31.1211 2011 PROPERTY TAX	$ 10,000	$ 1,978	$ 27,631	$ 54,768	276%
100.31.1212 2012 PROPERTY TAX	$ 55,000	$ 1,377	$ 51,943	$ -	94%
100.31.1310 MOTOR VEHICLE	$ 190,000	$ 38,676	$ 381,616	$ 132,142	201%
100.31.1320 MOBILE HOME	$ 6,000	$ 69	$ 177	$ 1,609	3%
100.31.1391 RAILROAD TAX	$ 2,500	$ -	$ 2,472	$ -	99%
100.31.1600 REAL ESTATE TRANSFER TAX	$ 6,700	$ 640	$ 8,177	$ 5,192	122%
100.31.1610 RECORDING INTANGIBLE TAX	$ 45,000	$ 3,132	$ 29,326	$ 38,375	65%
100.31.1710 GA POWER FRANCHISE TAX	$ 690,000	$ -	$ -	$ -	0%
100.31.1711 OKEF ELEC FRANCHISE TAX	$ 48,500	$ -	$ 48,737	$ 47,921	100%
100.31.1730 GAS FRANCHISE TAX	$ 18,000	$ -	$ 14,787	$ 9,305	82%
100.31.1750 CABLE TV FRANCHISE TAX	$ 100,000	$ 111,883	$ 111,883	$ 104,246	112%
100.31.1760 TELEPHONE FRANCHISE TAX	$ 24,000	$ 16,105	$ 44,555	$ 23,889	186%
100.31.3100 LOCAL OPT SALES AND USE	$ 1,975,000	$ 148,506	$ 1,247,247	$ 1,261,875	63%
100.31.4200 ALCOHOLIC BEVERAGE EXCISE	$ 215,000	$ 18,788	$ 150,622	$ 152,782	70%
100.31.6200 INSURANCE PREMIUMS (1%)	$ 830,000	$ -	$ 883,169	$ 852,970	106%
100.31.6300 FINANCIAL INSTITUTIONS	$ 31,000	$ 7,306	$ 7,306	$ 5,465	24%
100.31.9100 PENALTY AND INTEREST	$ 75,000	$ 6,790	$ 75,581	$ 60,018	101%
100.32.1100 BEER/WINE LIC	$ 85,000	$ 300	$ 76,804	$ 77,272	90%
100.32.1200 GENERAL BUSINESS LIC	$ 125,000	$ 4,941	$ 102,608	$ 115,617	82%
100.32.1220 BUSINESS LIC INSURANCE	$ 22,000	$ 7,080	$ 20,921	$ 19,763	95%
100.32.2100 BUILDING PERMITS	$ 130,000	$ 6,645	$ 71,015	$ 57,308	55%
100.32.2210 ZONING FEES	$ 4,000	$ 55	$ 3,513	$ 2,480	88%
100.32.2211 LAND-DISTURBING PERMITS	$ 500	$ -	$ -	$ -	0%
100.32.2230 SIGN PERMITS	$ 3,000	$ 110	$ 1,380	$ 860	46%
100.32.3910 PLAN REVIEW FEES	$ 31,250	$ 1,650	$ 15,573	$ 16,529	50%
100.34..... COPIES SOLD - ADMIN	$ 17,250	$ 1,669	$ 15,172	$ 11,995	88%
100.34.1910 QUALIFYING FEES	$ 2,000	$ -	$ 3,384	$ -	169%
100.34.2200 SPECIAL FIRE HAZMAT SERVICES	$ 2,484	$ -	$ 2,484	$ -	100%
100.34.4212 NSF FEES	$ 120	$ -	$ -	$ -	0%
100.34.....REVENUES-ORANGE HALL	$ 8,100	$ 727	$ 2,054	$ 3,264	25%
100.34.7500 PROGRAM INCOME - SENIORS	$ 6,800	$ 337	$ 4,098	$ 4,288	60%
100.34.9100 CEMETERY FEES	$ 40,200	$ 5,470	$ 25,777	$ 17,550	64%
100.34.9900 ADMIN. FEES - TOURISM	$ 3,600	$ 300	$ 2,400	$ 2,400	67%
100.34.9910 ADMIN. FEES - SPLOST	$ 4,000	$ 4,641	$ 6,227	$ 6,176	156%
100.35..... COURT FINES/FEES	$ 350,400	$ 43,345	$ 209,975	$ 221,982	60%
100.35.1300 LIBRARY FINES/COLLECTIONS	$ 5,000	$ 516	$ 3,893	$ 3,453	78%
100.36.1000 INTEREST EARNED	$ 5,000	$ 649	$ 4,992	$ 4,546	100%

CITY OF ST. MARYS
REVENUE & EXPENSE REPORT (UNADUDITED)
Feb-14

FINANCIAL SUMMARY			MONTHS COMPLETED % YEAR COMPLETED		8 66.67%
100-GENERAL FUND REVENUES	**CURRENT BUDGET**	**CURRENT PERIOD**	**FEB 2014**	**FEB 2013**	**% YTD BUDGET**
100.37.2000 ORANGE HALL DONATION	$ 50	$ 3	$ 83	$ 21	166%
100.38.0001 FUND EQUITY	$ 409,823	$ 34,152	$ 273,215	$ -	67%
100.38.1000 RENTAL INCOME	$ 325,000	$ 27,665	$ 226,584	$ 223,481	70%
100.38.1010 SPECIAL EVENTS RENTAL	$ 7,500	$ 450	$ 3,110	$ 4,413	41%
100.38.9010 MISCELLANEOUS INCOME	$ 23,587	$ (8,109)	$ 47,596	$ 56,521	202%
100.38.9020 SHARED SVC SOL/W & SPLOST	$ 25,000	$ -	$ -	$ 67,426	0%
100.38.9028 SHARED SERVICES -BOARD OF ED	$ 44,579	$ 24,369	$ 24,369	$ 9,312	55%
100.38.9031 SHARED SVCS - DOT	$ 16,900	$ 2,413	$ 16,890	$ -	100%
100.38.9032 SHARED SERVICES - HOSP AUTH.	$ 25,000	$ -	$ 25,000	$ -	100%
100.39.1200 OP T/F IN MULT GRANT FUND	$ 7,500	$ (7,641)	$ 305	$ 99,085	4%
100.39.1200 OP T/F IN SPLOST	$ -	$ -	$ -	$ -	#DIV/0!
100.39.2200 SALE CITY PROPERTY	$ 3,000	$ -	$ -	$ -	0%
100.39.3010 LOAN PROCEEDS	$ -	$ -	$ -	$ -	#DIV/0!
TOTAL REVENUE	**$ 8,677,743**	**$ 531,322**	**$ 6,730,098**	**$ 6,434,681**	**78%**

CITY OF ST. MARYS
REVENUE & EXPENSE REPORT (UNADUDITED)
Feb-14

FINANCIAL SUMMARY			MONTHS COMPLETED % YEAR COMPLETED		8 66.67%
100-GENERAL FUND EXPENDITURE SUMMARY	**CURRENT BUDGET**	**CURRENT PERIOD**	**FEB 2014**	**FEB 2013**	**% YTD BUDGET**
TOTAL LEGISLATIVE	$ 226,986	$ 12,106	$ 154,724	$ 107,293	68%
TOTAL EXECUTIVE	$ 259,595	$ 33,803	$ 191,734	$ 198,008	74%
TOTAL FINANCIAL ADMINISTRATION	$ 837,180	$ 54,035	$ 598,609	$ 564,849	72%
TOTAL IT	$ 174,021	$ 11,573	$ 118,210	$ 125,764	68%
TOTAL HUMAN RESOURCES	$ 127,518	$ 8,693	$ 75,009	$ 82,284	59%
TOTAL GEN GOVT BLDGS & PLANT	$ 152,871	$ 8,240	$ 91,351	$ 100,124	60%
TOTAL MUNICIPAL COURT	$ 178,003	$ 12,576	$ 103,708	$ 113,070	58%
TOTAL POLICE ADMINISTRATION	$ 2,312,562	$ 163,467	$ 1,406,376	$ 1,473,930	61%
TOTAL FIRE ADMINISTRATION	$ 1,706,415	$ 127,760	$ 1,142,013	$ 1,133,636	67%
TOTAL PUBLIC WORKS ADMIN	$ 1,246,979	$ 90,564	$ 804,931	$ 763,397	65%
TOTAL HIGHWAYS & STREETS ADMIN	$ 330,010	$ 30,839	$ 189,870	$ 179,887	58%
TOTAL CEMETERY	$ 86,400	$ 4,903	$ 49,078	$ 39,816	57%
TOTAL SENIOR CITIZENS CENTER	$ 124,771	$ 10,369	$ 76,138	$ 70,810	61%
TOTAL PARKS ADMINISTRATION	$ 47,320	$ 2,536	$ 30,649	$ 28,504	65%
TOTAL LIBRARY ADMINISTRATION	$ 303,771	$ 20,857	$ 189,527	$ 171,259	62%
TOTAL PROTECTIVE INSP ADMIN	$ 134,363	$ 7,102	$ 76,618	$ 88,771	57%
TOTAL PLANNING & ZONING	$ 185,834	$ 13,490	$ 118,712	$ 109,810	64%
TOTAL CODE ENFORCEMENT	$ 34,351	$ 378	$ 378	$ -	1%
TOTAL ECONOMIC DEVELOPMENT	$ 171,926	$ 344	$ 53,543	$ 117,145	31%
TOTAL AIRPORT	$ 5,000	$ 9,500	$ 15,912	$ 7,081	318%
TOTAL SPECIAL FACILITIES	$ 31,867	$ 2,961	$ 20,826	$ 15,794	65%
TOTAL EXPENDITURES	**$ 8,677,743**	**$ 626,097**	**$ 5,507,917**	**$ 5,491,231**	**63%**

REVENUE OVER/(UNDER) EXPENDITURES	**$ -**	**$ (94,775)**	**$ 1,222,181**	**$ 943,449**

Cash Balances:	$5,657,154	**Run Rate Analysis:**	
LESS: Restricted Budgeted Fund Equity	$409,823	**Average YTD Mo. Exp.**	**$688,490**
Unrestriced Cash Balances	$5,247,331	**Months of Operating Cash**	**7.58**
LESS: Outstanding P.O.'s	$30,373		
Available Cash	**$5,216,958**		

CITY OF ST. MARYS
REVENUE & EXPENSE REPORT (UNADUDITED)
Feb-14

FINANCIAL SUMMARY			MONTHS COMPLETED % YEAR COMPLETED		8 66.67%
275-SPECIAL REVENUE FUND REVENUES	**CURRENT BUDGET**	**CURRENT PERIOD**	**FEB 2014**	**FEB 2013**	**% YTD BUDGET**
TAXES	$ 115,322	$ 12,761	$ 69,465	$ 64,187	60%
CHARGES FOR SERVICES	$ 12,130	$ 409	$ 3,688	$ 3,379	30%
INVESTMENT INCOME	$ 21	$ 1	$ 7	$ 7	34%
CONTRIBUTIONS/DONATIONS	$ 1,097	$ 27	$ 665	$ 180	61%
MISCELLANEOUS	$ 7,400	$ 280	$ 4,114	$ 6,087	56%
OTHER FINANCING SOURCES	$ 22,000	$ -	$ 22,000	$ -	100%
TOTAL REVENUES	**$ 157,970**	**$ 13,479**	**$ 99,940**	**$ 73,841**	63%

275-SPECIAL REVENU FUND EXPENDITURE SUMMARY	**CURRENT BUDGET**	**CURRENT PERIOD**	**FEB 2014**	**FEB 2013**	**% YTD BUDGET**
PRSNL SERVICES/BENEFITS	$ 28,979	$ 2,217	$ 18,937	$ 16,930	65%
PURCHASED/CONTRACTED SVC	$ 113,245	$ 5,880	$ 76,056	$ 62,792	67%
SUPPLIES	$ 8,746	$ 761	$ 5,300	$ 3,382	61%
INTERGOVERNMENTAL	$ 7,000	$ -	$ 6,738	$ 1,000	96%
TOTAL TOURISM	**$ 157,970**	**$ 8,859**	**$ 107,031**	**$ 84,105**	68%

REVENUE OVER/(UNDER) EXPENDITURES	**$ -**	**$ 4,620**	**$ (7,091)**	**$ (10,264)**	**0**

Cash Balances: (-sal/fica-due to pooled cash)	-$23,995
LESS: Restricted Budgeted Fund Equity	$0
Unrestriced Cash Balances	-$23,995
LESS: Outstanding P.O.'s	$597
Available Cash	**-$24,593**

Run Rate Analysis:	
Average YTD Mo. Exp.	**$13,379**
Months of Operating Cash	(1.84)

CITY OF ST. MARYS
REVENUE & EXPENSE REPORT (UNADUDITED)
Feb-14

FINANCIAL SUMMARY			MONTHS COMPLETED		8
			% YEAR COMPLETED		66.67%
320-SPLOST FUND REVENUES	**CURRENT BUDGET**	**CURRENT PERIOD**	**FEB 2014**	**FEB 2013**	**% YTD BUDGET**
TAXES	$ 4,314,289	$ (204,473)	$ 85,903	$ 518,896	2%
INVESTMENT INCOME		$ 2	$ 8	$ 16	#DIV/0!
MISCELLANEOUS				$ -	
OTHER FINANCING SOURCES				$ -	#DIV/0!
TOTAL REVENUES	**$ 4,314,289**	**$ (204,471)**	**$ 85,910**	**$ 518,912**	**2%**

320-SPLOST FUND EXPENDITURE SUMMARY	**CURRENT BUDGET**	**CURRENT PERIOD**	**FEB 2014**	**FEB 2013**	**% YTD BUDGET**
320.51512-52.1211 AUDIT SPLOST VI	$ -	$ (3,030)	$ -	$ 3,000	#DIV/0!
320.51565-54.1500 CITY BUILDINGS VI	$ 150,000	$ (114,106)	$ 32,138	$ 293,478	21.4%
320.54220-54.1241 DRAINAGE - SPLOST VI	$ 25,700	$ 337	$ 23,089	$ 60,262	90%
320.54220-54.1416 PAVING/OVERLAY VI	$ 41,000	$ 372	$ 23,574	$ 76,553	57%
320.54310-54.1202 SEWER INFRA SPLOST VI	$ 3,705,300	$ 49,155	$ 59,231	$ 54,422	2%
320.59000-61.1000 OPERATING TFR OUT				$ -	#DIV/0!
TOTAL EXPENDITURES VI	**$ 3,922,000**	**$ (67,271)**	**$ 138,031**	**$ 487,715**	3.52%

320-SPLOST FUND EXPENDITURE SUMMARY	**CURRENT BUDGET**	**CURRENT PERIOD**	**FEB 2014**	**FEB 2013**	**% YTD BUDGET**
320.54200-54.1425 EQUIP/FACILITIES VII	$ 367,289	$ -	$ 10,489	$ -	3%
320.54220-52.2224 INFRASTRUCTURE VII	$ 25,000	$ -	$ -	$ -	0.0%
TOTAL EXPENDITURES VII	**$ 392,289**	**$ -**	**$ 10,489**	**$ -**	2.7%

REVENUE OVER/(UNDER) EXPENDITURES	**$ -**	**$ (137,200)**	**$ (62,610)**	**$ 31,197**

Cash Balances:	$65
LESS: Restricted Budgeted Fund Equity	$0
Unrestriced Cash Balances	$65
LESS: Outstanding P.O.'s	$11,203
Available Cash	-$11,138

Run Rate Analysis:	
Average YTD Mo. Exp.	**$18,565**
Months of Operating Cash	(0.60)

CITY OF ST. MARYS
REVENUE & EXPENSE REPORT (UNADUDITED)
Feb-14

FINANCIAL SUMMARY			MONTHS COMPLETED		8
			% YEAR COMPLETED		66.67%
505-WATER AND SEWER FUND REVENUES	**CURRENT BUDGET**	**CURRENT PERIOD**	**FEB 2014**	**FEB 2013**	**% YTD BUDGET**
505.33.4110 STATE GOV GRANTS-DIRECT	$ -	$ -	$ -	$ 165,151	#DIV/0!
505.34.4210 WATER CHARGES	$ 2,140,000	$ 166,816	$ 1,413,385	$ 1,411,034	66%
505.34.4211 TRANSFER/TEMP SERVICES	$ 45,000	$ 3,180	$ 30,750	$ 30,025	68%
505.34.4212 RECONNECTION NSF FEES	$ 80,000	$ 5,938	$ 54,535	$ 54,520	68%
505.34.4213 LATE FEES AND PENALTIES	$ 130,000	$ 11,290	$ 85,664	$ 86,972	66%
505.34.4214 TURN ON FEE	$ 42,500	$ 4,025	$ 28,910	$ 28,490	68%
505.34.4216 CAP RECOVERY WATER - DEV	$ 27,375	$ 2,258	$ 17,996	$ 28,504	66%
505.34.4217 WATER CHARGES 2	$ 700,000	$ 55,192	$ 470,003	$ 469,796	67%
505.34.4230 SEWERAGE CHARGES	$ 1,966,500	$ 158,620	$ 1,333,471	$ 1,327,365	68%
505.34.4231 SEWER CHARGES 2	$ 680,000	$ 52,675	$ 444,641	$ 444,418	65%
505.34.4236 CAP RECOVERY METER - DEV	$ 7,000	$ 560	$ 7,150	$ 5,320	102%
505.34.4256 CAP RECOVERY SEWER - DEV	$ 88,875	$ 5,770	$ 63,995	$ 91,198	72%
505.34.4263 CONSTRUCTION FEES	$ 77,500	$ 29,567	$ 145,911	$ 103,062	188%
505.38.0001 FUND EQUITY	$ 277,569	$ 23,131	$ 185,046	$ -	67%
505..... INTEREST/MISC/OTHER REVENUES	$ 5,000	$ 279	$ 3,248	$ 66,695	65%
TOTAL REVENUE	**$ 6,267,319**	**$ 519,301**	**$ 4,284,706**	**$ 4,312,551**	**68%**

SANITATION ADMINISTRATION EXPENDITURE SUMMARY	**CURRENT BUDGET**	**CURRENT PERIOD**	**FEB 2014**	**FEB 2013**	**% YTD BUDGET**
PRSNL SERVICES/BENEFITS	$ 947,348	$ 69,512	$ 634,831	$ 616,549	67%
PURCHASED/CONTRACTED SVC	$ 405,128	$ 17,497	$ 185,792	$ 268,171	46%
SUPPLIES	$ 644,816	$ 43,266	$ 359,100	$ 369,496	56%
CAPITAL OUTLAY	$ 108,500	$ -	$ -	$ 194,335	0%
DEPRECIATION/AMORTIZATION	$ -	$ -	$ -	$ -	#DIV/0!
INTERGOVERNMENTAL	$ 11,685	$ -	$ -	$ -	0%
DEBT SERVICES/FISCAL AGENT FEES	$ 5,000	$ -	$ -	$ 4,950	0%
TOTAL SANITARY ADMINISTRATION	**$ 2,122,477**	**$ 130,275**	**$ 1,179,723**	**$ 1,453,502**	**56%**

WATER ADMINISTRATION EXPENDITURE SUMMARY	**CURRENT BUDGET**	**CURRENT PERIOD**	**FEB 2014**	**FEB 2013**	**% YTD BUDGET**
PRSNL SERVICES/BENEFITS	$ 795,045	$ 59,399	$ 517,475	$ 511,000	65%
PURCHASED/CONTRACTED SVC	$ 254,619	$ 8,735	$ 101,845	$ 114,353	40%
SUPPLIES	$ 282,816	$ 12,210	$ 148,153	$ 166,315	52%
CAPITAL OUTLAY	$ 8,500	$ -	$ -	$ -	0%
DEPRECIATION/AMORTIZATION		$ -	$ -	$ -	#DIV/0!
INTERGOVERNMENTAL	$ 60,758	$ -	$ -	$ -	0%
DEBT SERVICES/FISCAL AGENT FEES	$ 3,000	$ -	$ 689	$ 689	23%
TOTAL WATER ADMINISTRATION	**$ 1,404,738**	**$ 80,344**	**$ 768,162**	**$ 792,357**	**55%**

CITY OF ST. MARYS
REVENUE & EXPENSE REPORT (UNADUDITED)
Feb-14

FINANCIAL SUMMARY			MONTHS COMPLETED % YEAR COMPLETED		8 66.67%
DEBT SERVICE-PRINCIPLE EXPENDITURE SUMMARY	**CURRENT BUDGET**	**CURRENT PERIOD**	**FEB 2014**	**FEB 2013**	**% YTD BUDGET**
505.58000-58.1110 BOND PYMT 88 & 92 PRIN	$ 300,000	$ -	$ 300,000	$ 285,000	100.00%
505.58000-58.1340 GEFA LOAN 95-021-W	$ -	$ -	$ -	$ 1,558	#DIV/0!
505.58000-58.1380 GEFA LOAN CWS-RF-03	$ 240,073	$ 19,933	$ 158,824	$ 154,252	66%
505.58000-58.1382 GEFA LOAN 2010-L26WQ	$ 31,835	$ 2,665	$ 21,087	$ -	66%
DEBT SERVICE-PRINCIPLE	**$ 571,908**	**$ 22,598**	**$ 479,911**	**$ 440,810**	**84%**

DEBT SERVICE-INTEREST EXPENDITURE SUMMARY	**CURRENT BUDGET**	**CURRENT PERIOD**	**FEB 2014**	**FEB 2013**	**% YTD BUDGET**
505.58000-58.2110 BOND PAYMENT 88 & 92	$ 124,191	$ -	$ 121,275	$ 139,191	98%
505.58000-58.2115 INTEREST-BOND INT 2010	$ 1,915,400	$ -	$ 957,700	$ 957,700	50%
505.58000-58.2340 GEFA LOAN 95-021-WQ INT	$ -	$ -	$ -	$ 7	#DIV/0!
505.58000-58.2380 GEFA LOAN CWS-RF-0	$ 93,340	$ 7,852	$ 63,452	$ 68,023	68%
505.58000-58.2382 GEFA LOAN 2010 L26WQ	$ 35,265	$ 2,843	$ 22,978	$ -	65%
DEBT SERVICE-INTEREST	**$ 2,168,196**	**$ 10,695**	**$ 1,165,404**	**$ 1,164,921**	**54%**

505-59000-61.1000 OPERATING TFR OUT	$ -		$ -		

TOTAL EXPENDITURES	**$ 6,267,319**	**$ 243,911**	**$ 3,593,201**	**$ 3,851,590**	**57%**

REVENUE OVER/(UNDER) EXPENDITURES	**$ -**	**$ 275,390**	**$ 691,505**	**$ 460,960**

Cash Balances:	$5,319,799	**Run Rate Analysis:**	
LESS: Restricted Budgeted Fund Equity	$277,569	**Average YTD Mo. Exp.**	**$449,150**
Unrestriced Cash Balances	$5,042,230	**Months of Operating Cash**	**11.12**
LESS: Outstanding P.O.'s	$46,362		
Available Cash	**$4,995,868**		

CITY OF ST. MARYS
REVENUE & EXPENSE REPORT (UNADUDITED)
Feb-14

FINANCIAL SUMMARY			MONTHS COMPLETED		8
			% YEAR COMPLETED		66.67%
540-SOLID WASTE FUND REVENUES	**CURRENT BUDGET**	**CURRENT PERIOD**	**FEB 2014**	**FEB 2013**	**% YTD BUDGET**
540.34.4111 RESIDENTIAL REFUSE CHARGE	$ 963,000	$ 81,221	$ 648,666	$ 649,819	67%
540.34.4112 COMMERCIAL REFUSE CHARGES	$ 22,000	$ 1,938	$ 15,187	$ 14,947	69%
540.34.4190 LATE FEES AND PENALTIES	$ 22,500	$ 1,857	$ 14,936	$ 15,309	66%
540.34.9900 OTHER CHARGES	$ 12,500	$ 1,775	$ 13,975	$ 39,670	112%
540.36.1000 INTEREST REVENUES	$ -	$ -	$ -	$ -	#DIV/0!
540.38.0001 FUND EQUITY	$ -	$ -	$ -	$ -	#DIV/0!
TOTAL REVENUES	**$ 1,020,000**	**$ 86,791**	**$ 692,764**	**$ 719,745**	**68%**

540-SOLID WASTE FUND EXPENDITURE SUMMARY	**CURRENT BUDGET**	**CURRENT PERIOD**	**FEB 2014**	**FEB 2013**	**% YTD BUDGET**
PRSNL SERVICES/BENEFITS	$ 82,990	$ 6,584	$ 57,308	$ 53,632	69%
PURCHASED/CONTRACTED SVC	$ 907,415	$ 75,146	$ 528,429	$ 521,864	58%
SUPPLIES	$ 2,950	$ 895	$ 1,790	$ 2,160	61%
INTERGOVERNMENTAL	$ 26,645	$ -	$ -	$ -	0%
DEPRECIATION/AMORTIZATION	$ -	$ -	$ -	$ -	#DIV/0!
TOTAL SOLID WASTE COLLECTION	**$ 1,020,000**	**$ 82,625**	**$ 587,526**	**$ 577,656**	**58%**

REVENUE OVER/(UNDER) EXPENDITURES	**$ -**	**$ 4,166**	**$ 105,238**	**$ 142,089**	**0**

Cash Balances:	$428,795	**Run Rate Analysis:**	
LESS: Restricted Budgeted Fund Equity	$0	**Average YTD Mo. Exp.**	**$73,441**
Unrestriced Cash Balances	$428,795	**Months of Operating Cash**	**5.84**
LESS: Outstanding P.O.'s	$0		
Available Cash	**$428,795**		

555 -AQUATIC CENTER FINANCIAL SUMMARY	FY2014 Budget	Mar-13	Apr-13	May-13	Jun-13	Jul-13	Aug-13	Sep-13	Oct-13	Nov-13	Dec-13	Jan-14	Feb-14	12Mths	YTD Feb-14	Feb-13
REVENUE SUMMARY																
CHARGES FOR SERVICES	385,400	2,607	13,998	73,484	95,150	82,791	27,032	9,536	375		137.85	1,000.00	1,760.00	306,111	122,632	147,674
INVESTMENT INCOME	-												0.00			
CONTRIBUTIONS/DONATIONS	-												0.00			
MISCELLANEOUS	-	1	21	20	103	105	104	55	18.68			0.29	3.10	428	286	1,593
OTHER FINANCING SOURCES	-												0.00			
TOTAL REVENUES	**385,400**	**2,608**	**14,018**	**73,505**	**95,253**	**82,896**	**27,136**	**9,591**	**394**	**-**	**137.85**	**1,000.29**	**1,763.10**	**306,539**	**122,918**	**149,267**
EXPENDITURE SUMMARY																
PRSNL SERVICES/BENEFITS		2,048	1,938	482		964			-964.01		10,412.16			14,880		77,878
PURCHASED/CONTRACTED SVC	246,900	4,103	3,512	21,908	60,650	42,385	24,002	15,181	7190.01	9923.62	0.00	11,870.37	9,246.72	200,725	130,211	36,587
SUPPLIES	138,500	6,193	6,800	12,998	25,805	6,912	10,575	7,669	8008.29	5447.57	4,038.53	3,232.83	3,293.59	97,679	49,177	59,264
CAPITAL OUTLAY	-	-														
DEPRECIATION/AMORTIZATION	-	-														
TOTAL AQUATIC CENTER	**385,400**	**12,344**	**12,249**	**35,388**	**86,455**	**50,262**	**34,577**	**22,850**	**14,234**	**15,371**	**14,451**	**15,103**	**12,540**	**313,284**	**179,388**	**173,730**
REVENUE OVER/(UNDER) EXPENDITURES	**-**	**(9,737)**	**1,769**	**38,116**	**8,798**	**32,634**	**(7,440)**	**(13,258)**	**(13,841)**	**(15,371)**	**(14,313)**	**(14,103)**	**(10,777)**	**(6,745)**	**(56,469)**	**(24,463)**

Cash Balances: (-sal/fica)	**-$151,268**
LESS: Restricted Budgeted Fd Equity	**$0**
Unrestriced Cash Balances	**-$151,268**
LESS: Outstanding P.O.'s	**$2,660**
Available Cash	**-$153,928**