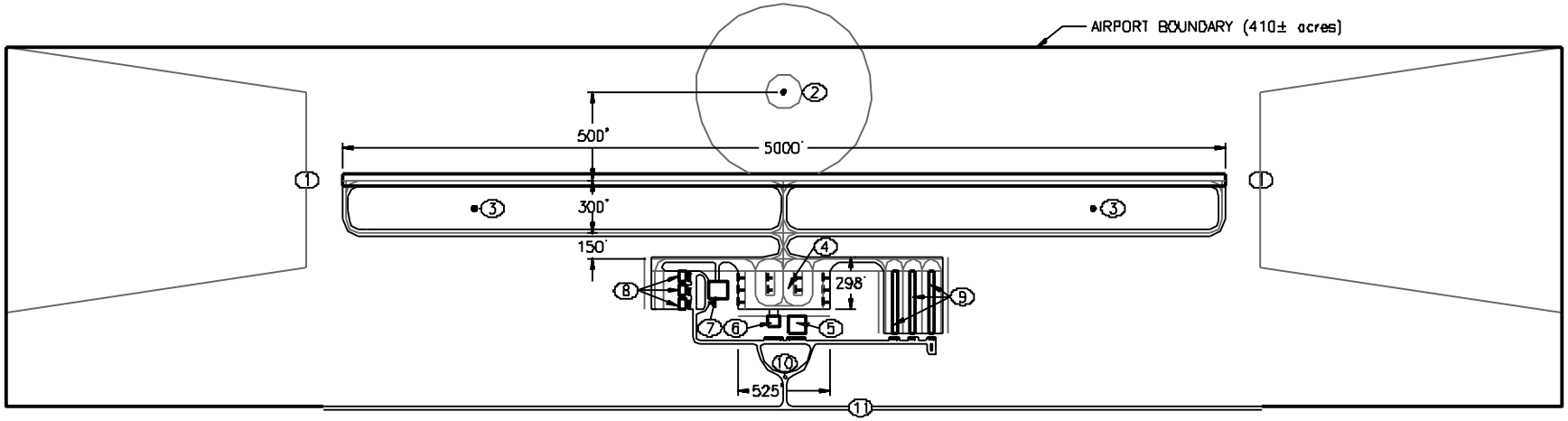

1	1700'x 1000'x 1510' RPZ (ALL, NOT LOWER THAN 3/4 MILE VISIBILITY)
2	ASOS WITH CLEAR AREAS (Automated Surface Observing System)
3	WINDSOCK
4	GA APRON (10 TIE DOWN AREAS)
5	FBO (10,000 sq.ft., 100'x100')
6	GA TERMINAL (4,200 sq.ft., 60'x70')
7	FUEL FARM (10,000 sq. ft., 100'x 100' FOOTPRINT)
8	CORPORATE HANGAR (2,400 sq.ft., 40'x 60')
9	10 UNIT T-HANGAR
10	ENTRANCE ROAD
11	STATE HIGHWAY